VANSTEEL

CORVETTE SUSPENSION BRAKES & STEERING PARTS

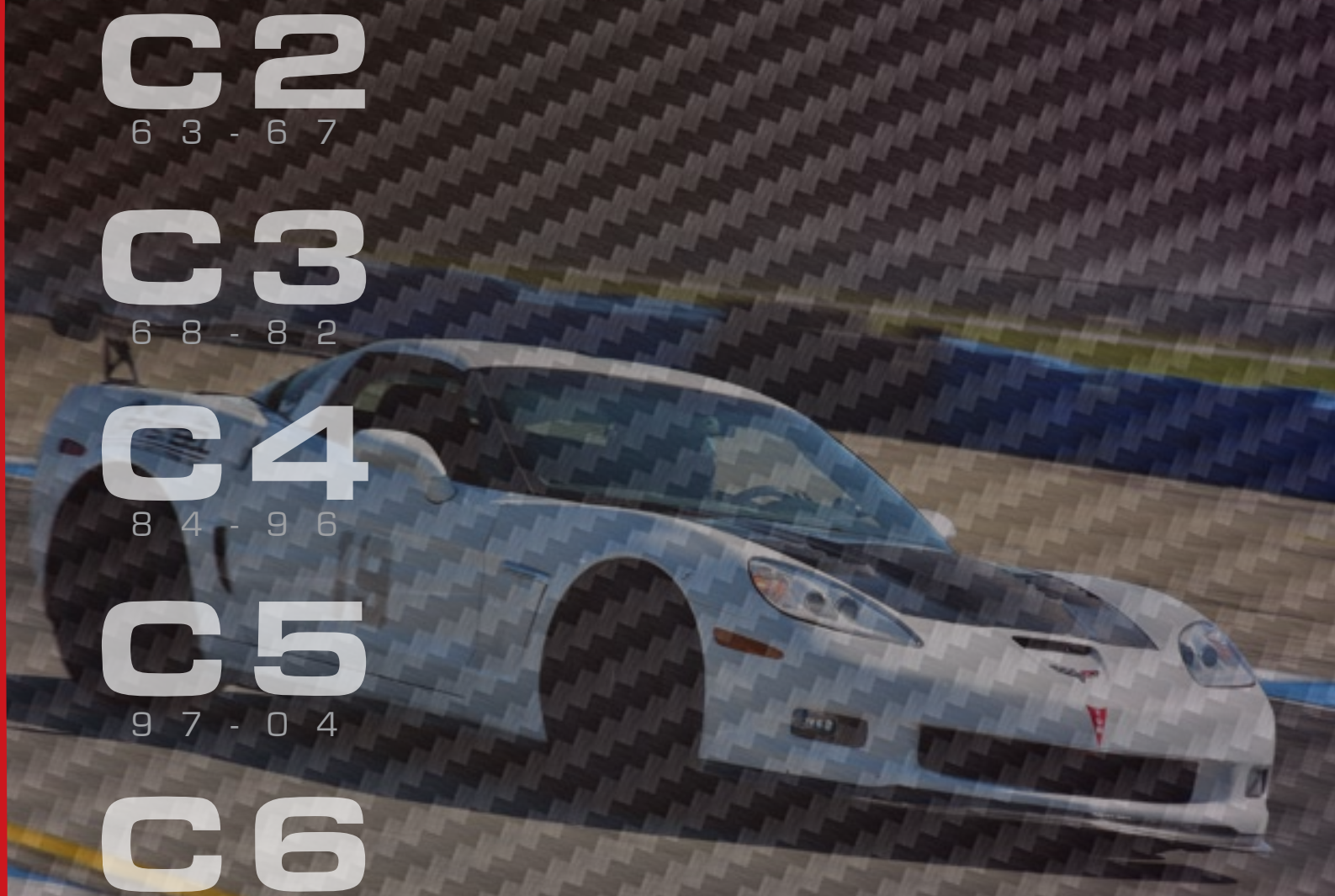

C2
63-67

C3
68-82

C4
84-96

C5
97-04

C6
05-13

C7
14+

800.418.5397
vansteel.com

About Van Steel

Passion, Experience and Knowledge Leads the way in Corvette Suspension, Steering and Brakes

Since the mid 1970's Van Steel, the name, the company has grown to become the standard by which customers purchase and companies gauge their performance. The brand Van Steel originates from John Pfanstiehl, a small Connecticut based company bought by Art Dorsett 27 years ago. Art's passion and mechanical creativeness continues with his son Dan Dorsett, a second generation "Car Nut". Originally rebuilding rear wheel bearings Van Steel now offers over 2,000 new and rebuilt parts. Their focus still remains in suspension, steering and brakes.

Experience, for 38 years Art and his team continue to ***listen*** to their customers, ***look*** for ways to improve, ask ***why*** things failed and ***find*** solutions to the failures. With each of these ***Experiences***, Van Steel has gained valuable ***Knowledge*** needed to provide the highest quality of customer technical support in the industry.

Passion is the fuel that drives the Van Steel team for perfection in their builds and inspires the adaptation of the new technology to the older generations. For 38 years Van Steel's technical partners continue to grow. The engineering and technical expertise comes from some of the best in the industry, as we are proud of these resources, since we all share a similar automotive ***Passion***.

THANK YOU.

AC Delco
ADDCO
Bendix
Borgeson
CSSB
D2
Gun Drilling
Hard Bar
Hawk
Hyperco
JRI
QA1
SKF
Timken
Wilwood

MOST IMPORTANT
THE VAN STEEL CUSTOMER
Thank you, Thank you, Thank you!!

#vansteelcorvettes

VAN STEEL
CORVETTE SUSPENSION BRAKES & STEERING PARTS

SEE PG 60

CONTENTS

ORDERING
Due to the high cost of handling, we require a $25.00 minimum order. Be sure to specify year of car, front or rear, left or right and any other pertinent information to allow us to properly fill your order.

PRICING
All prices are subject to change without notice.
All items will be shipped at current prices unless discussed prior to shipping. Customers are encouraged to call or check web site for the latest prices.

Prices with "ND" are not eligible for discounts. Van Steel offers Military, Forum Member, NCCC, NCRS and other approved clubs a discount. Discounts are based off of the Van Steel published MSRP prices. Dealer and Warehouse Distributor pricing is only available to qualified automotive service and/or retailers.

PAYMENT
American Express, Discover, Master Card and Visa credit cards are accepted forms of payment. Van Steel does not ship orders COD. Personal Checks may be accepted on Pre-Paid sales.

RETURNS AND EXCHANGES
Advanced notice for returned merchandise must be given and approved prior to returning to Van Steel. All returned merchandise must be accompanied with a copy of the invoice. Exchanges are eligible in the first 30 days and must be unused. Approved returns are subject to a 20% restocking fee. All return credits are applied to future purchases. Racing and/or speciality components are not eligible for return. All shipping costs for returns are the responsibility of the customer.

CORE REFUNDS
Core refund policy has been changed as for 2013. Because both the quality and quantity of used rebuild-able parts (cores) is diminishing, Van Steel is requesting a faster/quicker return policy, with the hope to provide you the customer with a quality, reasonably priced component in a timely manner. All cores must be returned to Van Steel within 30 days of the invoice date to be eligible for full refund. Beyond 30 days, a 50% late fee may be assessed unless noted otherwise. The core refund is based upon the rebuild-ability of the core. Dimensional exactness and surface smoothness are part of the refund criteria.

WARRANTY
Warranty of parts and services purchased from Van Steel is limited to the replacement of the defective part only. Van Steel DOES NOT cover the replacement labor, shipping, and/or subsequent damage, injury or related expenses caused by the component. Van Steel components are made of high quality and craftsmanship to reduce failure. Van Steel warranties the fit, finish and makes every effort to insure the best valued components.

For specific component warranty please see page 61

SUSPENSION

– Complete Kits 4-7, 10
– Rebuild Kits 12
– Composite Springs 14
– Front 16-18
– Rear 30
– Bearing Assembly 22, 26
– Strut Rod 24
– Trailing Arm 27
– Sway Bars 35-37
– Half Shaft 32-34
– Shocks 8, 25

STEERING

– Complete Kits 19
– Boxes 19, 21
– 62-83 Parts 20

BRAKES

– Complete Kits 38
– Conversion Kits 29
– Front Brakes 43
– Rear Brakes 46
– Drum Brakes 42
– Parking Brakes 45
– Pads 40
– Brake Lines 41
– Calipers/Rotors 48

REBUILDING SERVICES

– Control Arms 11
– Bearings & Trailing Arms 26, 29
– Differentials & Half Shafts 32-34

OTHER

– New Parts 60
– Tools 49
– Alignment/Torque Specs 50-53
– Exchange Program 54
– Cores 55
– Warranty 56
– Driver Highlight 57
– Forgeline Wheels 58
– Order Form 61

PLAN YOUR BUILD

Our goal at Van Steel is a happy and satisfied customer. With 90 plus years of experience in authenticity, ride quality, handling and durability, we understand. Van Steel recommends to accomplish your dreams, take a moment and complete our "Plan Your Build". This plan helps to eliminate double expenditures, more accurately matching the application of modern technology both the older and newer cars, reduce the possibility of under or over building the project car and understand cause and effect of the up-grades.

1. THE BUILD
- a. NCRS
  - i. Show /Judged _____
  - ii. Survivor _____
- b. Driver
  - i. Standard street _____
  - ii. Spirited Street _____
  - iii. Street/Track
    - 1. Street/Drag _____
    - 2. Street/Autocross _____
    - 3. Street /Long Track _____
  - iv. Track
    - 1. Experience _____
    - 2. Goal for Level of Accomplishment
      - a. Star _____
      - b. Co-Star _____
      - c. Supporting Cast _____
    - 3. Sanctioning Body _____
    - 4. Class _____
    - 5. Safety Requirements _____
    - 6. Weight _____

2. BUDGET
- a. Establish a Realistic Budget
  - i. High and low _____

3. ENGINE
- a. Size and type
  - i. Power Adder (weight) _____
  - ii. Additional cooling _____
- b. Rear Wheel Horsepower _____
- c. Transmission
  - i. Manual, type _____
  - ii. Automatic _____
    - 1. Trans Brake _____

4. TIRE/WHEEL
- a. Make/Brand
  - i. Size front and rear _____
  - ii. Model _____

5. CHASSIS/SUSPENSION
- a. Configuration
  - i. Stock _____
  - ii. Retro Mod _____
- b. Steering
  - i. Stock _____
  - ii. Retro mod _____
- c. Springs
  - i. OEM Design
    - 1. Spring Rate _____
  - ii. Retro Mod
    - 1. Dimensions _____
    - 2. Type _____
    - 3. Spring Rate _____
- d. Brakes
  - i. Stock _____
  - ii. Retro Mod _____
  - iii. Track _____
- e. Sway Bars
  - i. Size
    - 1. Front _____
    - 2. Rear _____

NOTES: _____

_____

_____

_____

_____

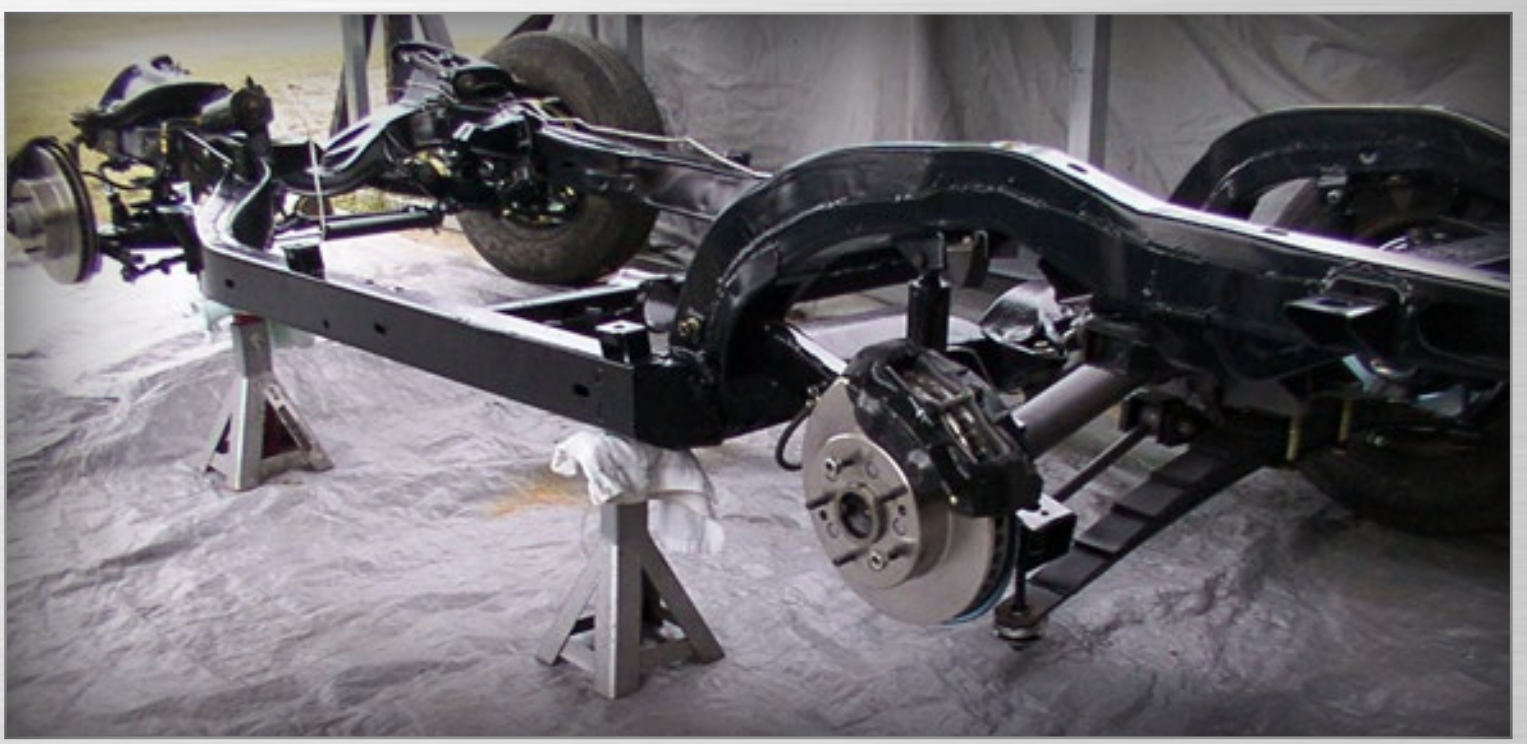

COMPLETE CHASSIS REBUILD

Van Steel will completely disassemble your frame and rebuild every suspension component front to rear. If the body is off the frame, we will jig the frame as well. You can choose from many different options. We baseline a standard rebuild and will modify your order to accommodate what YOU want to help achieve your goal. Below are some of the parts we rebuild or replace.

- Front A-Arms
- Steering Box
- Front Bearing Assemblies
- Tie Rod Ends & Sleeves
- New Idler Arm
- Power Steering (Valve, Cylinder & Hoses)
- Sway Bar Bushings
- Car Set of Shocks
- Car Set of Calipers w/Lines & Hoses
- Trailing Arms
- Rear Spring
- Half Shafts
- Drive Shaft
- Strut Rods
- Differential
- Differential Cross Member
- Pinion Bushing
- Bump Stops

Packages Starting at

$4399.99*

**Does Not Include Body Removal, Motor or Transmission*

CCR-01 - Complete Chassis Rebuild $4999.99
CCR-01-CO - Complete Chassis Rebuild w/Front & Rear Coilovers & D8-6/4 Wilwood Calipers $8999.99
CCR-01D - Complete Chassis Rebuild - Drum Brake Car $4399.99

Additional,O Parts & Services

Sandblast Frame (walnut shell) $425.00
Brake Line & Fuel Line Kits ..... See Page 41

Powder Coat Frame $550.00
– Additional Colors are $150-$200

1963-82
EZ Ride Suspension System

This is "EZ Ride" suspension system is engineered to provide the smoothest and softest riding Corvette with original type suspension to date. Ideal for cruising, with specialty valved QA1 shocks and soft spring rated springs. Together they eliminate the unpleasant harshness normally found in the sport minded suspension. Matched Addco sway bars retain good handling while focusing on ride quality.

- *460lb. Front Coil Springs*
- *Rear "EZ Ride" Hyperco Composite Spring Kit*
- *Front Addco 1.00" Steel Anti-Sway Bar Kit*
- *Rear Addco .625" Steel Anti-Sway Bar Kit*
- *Car Set QA1 "Ride Quality" Composite Spring Shocks*

VS-42003	(63-77)	$1,279.99
VS-42003A	(78-79)	$1,279.99
VS-42003B	(80-82)	$1,279.99

Exclusively Selected System

1963-82
Street & Slalom Suspension System

Designed for Spirited Street driving, this package is a step above the famous F41 option. Van Steel addresses the springs with an increased front spring rate, with a slightly lower front stance combined with a matched low arch & higher rated rear composite spring. Bilstein Sport Tuned shock absorbers control the suspension providing a firm, not harsh, ride. The matched Addco sway bars control chassis roll in the corners. In the rear we include Smart Struts which reduces the camber changes. The results maximize the tires forward grip and lateral support. Once installed, you will instantly feel the change.

- *550 lb. Front Coil Springs*
- *360 lb. Rear Low Arch Composite Spring kit*
- *Matched Addco Anti Sway Bar Kits F1.125" R.750"*
- *Matched Bilstein Sport Shocks*
- *Smart Strut Assembly*

VS-42002	(63-77)	$1,499.99
VS-42002A	(78-79)	$1,499.99
VS-42002B	(80-82)	$1,499.99

1963-82
Advanced Street & Slalom Kit

To describe the Advanced Street and Slalom System in one word is adjustability. This system replaces the fixed bucket coil spring with an adjustable front "semi-coil over" spring. This unit is adjustable in ride height and the QA1 shock provides compression and rebound adjustability. Van Steel up sizes the front Addco sway bar for improved front response in the corners. In the rear we increase the composite spring rate while maintaining ride height. Added to this system are matching rear single adjustable QA1 shock absorbers, a rear Addco sway bar and adjustable HD Smart Struts. Additional spring rates are available. This is truly an adjustable, Advanced Street and Slalom System for the 63-82 Corvette.

- *Front 550 lb. Front Semi Coil Spring Kit*
- *Rear Composite Low Arch 360 lb. Spring Kit*
- *QA1 Single Adjustable Shocks*
- *Addco Matched Sway Bar Kit, F 1.250 R .750*
- *Smart Strut Assembly*

VSD-01 (63-77).....$1,924.99
VSD-01A (78-79) $1,924.99
VSD-01B (80-82) $1,924.99

1985-96
Sport Suspension System

This system is designed for the "Spirited Street" driver, firm and responsive without harshness. Hyperco composite springs are matched with Bilstein Sport valved shocks which returns the C4 to Corvette Challenge sharpness. Included in this are polyurethane bushings, Smart Struts and an up sized 32mm front Addco anti-sway bar.

- *Sharper Handling*
- *Lower Stance*
- *Precise Fit*

VS-42840 (85-87).....$2,099.99
VS-42842 (88-96).....$2,099.99

1984-96
Lowering Kit

VS-32309.....$40.99

Polyurethane Wedges provide the ability to lower the front of the C4 by raising the spring in the spring cradle. Special 8 inch rear spring bolts increase the amount of adjustment allowing for a lower rear ride height.

1963-82
Front Coil Over System

Van Steel designed; the Front Coil Over System is the ultimate in 63-82 front suspension up grades. A true BOLT IN System, this package provides adjustable ride height, single adjustable QA1 shocks, Moog ball joints and lower bump stops. The light weight, strong control arms are constructed with 4130 Chromoly tubing, tig welded, jig fit and finished in a gloss black powder coat finish. 6 degrees of positive caster this improves the handing and high speed stability. A vast selection of lifetime Hyperco springs can be tailored to your exact needs. Delrin bushings and special cross shafts are included in the package. Our base systems are listed, please call for special applications.

- *Light Weight*
- *True Bolt In*
- *Fully adjustable*
- *Improved Handling*
- *Powder Coat Finish*
- *Made in the USA*

Prt No.	Motor	Shocks	Price
AR-09C-450	Small Block	Single Adjustable	**$2249.99**
AR-09C-550	Big Block	Single Adjustable	**$2249.99**
AR-09CD-450	Small Block	Double Adjustable	**$2499.99**
AR-09CD-550	Big Block	Double Adjustable	**$2499.99**

1963-82
Rear Coilover Systems

Get more control out of your suspension and enjoy those corners even more by eliminating the leaf springs.

- *Offset Trailing Arms - Powder Coated Black*
- *Optional Johnny Joint Available*
- *QA1 Single or Double Adjustable Shocks*
- *Hyperco Coil Springs*
- *2 Upper Reinforcement Brackets*
- *Eliminates Rear Leaf Spring*
- *Spanner Wrenches*

Prt No.	Motor	Shocks	With	Price
CO-R-78SB	Small Block	Single Adjustable	–	**$1399.99**
CO-R-78SB-C	Small Block	Single Adjustable	–	**$2609.99**
CO-R-78SB-D	Small Block	Double Adjustable	–	**$1699.99**
CO-R-78SB-D-C	Small Block	Double Adjustable	w/NewBearing Assemblies	**$2879.99**
CO-R-78SB-D-JJ	Small Block	Double Adjustable	w/Johnny Joints	**$1849.99**
CO-R-78SB-JJ	Small Block	Single Adjustable	w/Johnny Joints	**$1545.99**
CO-R-78BB	Big Block	Single Adjustable	–	**$1399.99**
CO-R-78BB-C	Big Block	Single Adjustable	–	**$2609.99**
CO-R-78BB-D	Big Block	Double Adjustable	–	**$1699.99**
CO-R-78BB-D-C	Big Block	Double Adjustable	w/NewBearing Assemblies	**$2879.99**
CO-R-78BB-D-JJ	Big Block	Double Adjustable	w/Johnny Joints	**$1849.99**
CO-R-78BB-JJ	Big Block	Single Adjustable	w/Johnny Joints	**$1545.99**

Exclusive
Van Steel Design

1988-96
Coilover Systems

When you demand more control from your suspension, a coilover kit is the only way to go. Get single or dual adjustable shocks, with a multitude of spring rates available depending on how and where you drive your car.

- *QA1 Single or Dual Adjustable Shocks - each knob has 18 adjustment points*
- *Hyperco Coil Springs*
- *Front Shocks Inverted*
- *2 Pin Mount Brackets*
- *2 Rear Lower Mounts*
- *1 Set of Spanner Wrenches*

Prt No.	Shocks	Price
CO-C4-SA-Frt-Sys	Front Coilovers Single Adjustable	$799.99
CO-C4-SA-RR-Sys	Rear Coilovers Single Adjustable	$1129.99
CO-C4-SA-System	Front/Rear Coilovers Single Adjustable	$1799.99
CO-C4-DA-Frt-Sys	Front Coilovers Double Adjustable	$1055.99
CO-C4-DA-RR-Sys	Rear Coilovers Double Adjustable	$1429.99
CO-C4-DA-System	Front/Rear Coilovers Double Adjustable	$2399.99

FS-9296-CB

1984-96 Camber Braces

Prt No.	Year	Discription	Price
FS-8489-CB	84-89	Front Camber Brace - L98	$219.99
FS-9296-CB	92-96	Front Camber Brace - LT-1/LT-4	$219.99

1997-04
Coilover Systems

Spring options allow you to select a softer ride for cruising or to a more firm, entry level track usage spring rates. The QA1 coil over shocks are available with 18 settings per single or double adjusters. With this added speed control you adjust the ride from soft to race track harsh with just a click of the knob. Additional spring rates are available upon request.

- *Personalization in Ride and Handling Options*
- *Adjustable Ride Height*
- *Independent Suspension Tuning*
- *Adjustable Shock Settings*

Prt No.	Location	Shocks	LBS	Price
CO-GD402-09450	Front	Double Adjustable	450	$799.99
CO-GD402-09550	Front	Double Adjustable	550	$799.99
CO-GD402-09650	Front	Double Adjustable	650	$799.99
CO-GD403-07450	Rear	Double Adjustable	450	$899.99
CO-GD403-07550	Rear	Double Adjustable	550	$899.99
CO-GD403-07650	Rear	Double Adjustable	650	$899.99
CO-C5/6-SA-450	System	Single Adjustable	450	$1234.99
CO-C5/6-SA-550	System	Single Adjustable	550	$1234.99
CO-C5/6-SA-650	System	Single Adjustable	650	$1234.99
CO-C5/6-DA-450	System	Double Adjustable	450	$1599.99
CO-C5/6-DA-550	System	Double Adjustable	550	$1599.99
CO-C5/6-DA-650	System	Double Adjustable	650	$1599.99

SHOCKS
1963-2013

63-82 Delco & KYB Shocks

Prt No.	Year	Description	Price
FS-14	63-82	Shock KYB, Front, GR2	ea. $44.99
FS-18-DEL	63-82	Corvette Front, Delco OE Shock	ea. $44.99
SR-18	63-82	Rear Shock Absorber KYB, GR2	ea. $44.99
SR-18-DEL	63-82	Corvette, Rear, Delco OE Shock,	ea. $44.99

63-13 Bilstein Shock Packages

Prt No.	Year	Description	Price
BSP-6382	63-82	Bilstein HD Shock Package	$499.99
BSP-8487	84-87	Bilstein Shock Package Base Settings	$499.99
BSP-8487Z	84-87	Bilstein Shock Package w/Z51	$499.99
BSP-8896	88-96	Bilstein Shock Package non Z51	$499.99
BSP8896Z	88-96	Bilstein Shock Package w/Z51	$499.99
BSP-9703	97-13	Bilstein HD Shock Package non Z51	$499.99
BSP-9703Z	97-13	Bilstein Shock Package w/Z51 settings Sport	$499.99

SEE WEB FOR INDIVIDUAL PRICING

63-13 QA1 Non-Adjustable Shocks

Prt No.	Year	Description	Price
FQS-6382-NA	63-82	Front QA1 Non Adjustable Shock, Great Ride	ea. $131.99
FQS-8487-NA	84-87	Front QA1 Non Adjustable Shock, Great Ride	ea. $131.99
FQS-8896-NA	88-96	Front QA1 Non Adjustable Shock, Great Ride	ea. $131.99
FQS-9713-NA	97-13	Front QA1 Non adjustable “Ride” Shock	ea. $131.99
RQS-6382-NA	63-82	Rear QA1 Non Adjustable “Ride” Shock	ea. $119.99
RQS-8487-NA	84-87	Rear QA1 Non Adjustable Shock Absorber	ea. $119.99
RQS-8896-NA	88-96	Rear QA1 Non Adjustable “Ride” Shock	ea. $119.99
RQS-9713-NA	97-13	Rear QA1 Non Adjustable “Ride” Shock	ea. $119.99

1965-82 Semi-Coilovers

Prt No.	Motor	Shocks	Price
FSC-01-400	Small Block	Single Adjustable	$669.99
FSC-01D-400	Small Block	Double Adjustable	$949.99
FSC-02-450	Small Block	Single Adjustable	$669.99
FSC-02D-450	Small Block	Double Adjustable	$949.99
FSC-03-550	Big Block	Single Adjustable	$669.99
FSC-03D-550	Big Block	Double Adjustable	$949.99

FSC-01-400

QA1 Single Adjustable Shocks

Prt No.	Year	Description	Price
FQS-6382-S	63-82	QA1 Front Single Adj Shock	ea. $167.99
FQS-8487-S	84-87	QA1 Front Single Adj Shock	ea. $167.99
FQS-8896-S	88-96	QA1 Front Single Adj Shock	ea. $167.99
RQS-6382-S	63-82	QA1 Rear Single Adj Shock	ea. $177.99
RQS-8487-S	84-87	QA1 Rear Single Adj Shock	ea. $177.99
RQS-8896-S	88-96	QA1 Rear Single Adj Shock	ea. $177.99

QA1 Double Adjustable Shocks

Prt No.	Year	Description	Price
FQS-6382-D	63-82	QA1 Front Double Adj Shock	ea. $266.99
FQS-8487-D	84-87	QA1 Front Double Adj Shock	ea. $266.99
FQS-8896-D	88-96	QA1 Front Double Adj Shock	ea. $266.99
FQS-9713-D	97-13	QA1 Front Double Adj Shock	ea. $266.99
RQS-6382-D	63-82	QA1 Rear Double Adj Shock	ea. $266.99
RQS-8487-D	84-87	QA1 Rear Double Adj Shock	ea. $286.99
RQS-8896-D	88-96	QA1 Rear Double Adj Shock	ea. $286.99
RQS-9713-DL	97-13	Left Rear Double Adj Shock with Upper Mount Plate	ea. $379.99
RQS-9713-DR	97-13	Right Rear Double Adj Shock with Upper Mount Plate	ea. $379.99

97-13 JRI High Performance Double Adjustable Shocks

Prt No.	Year	Description	Price
JRi-C3-CSK	63-82	JRi Double Adjustable Shock - Must use Van Steel Jri Lower Arms	set $3,449.99
JRI-RAFT-DA	97-13	JRi Double Adjustable Shocks - RAFT Valving	set $3,129.99
JRI-RAFT-NA	97-13	JRi Non Adjustable Shocks - RAFT Valving	set $1,399.99

Coilovers on page 6

Track Day Suspensions

These C5/6 Corvette track kits presented by Van Steel are a culmination of over ten years of listening, testing, prototyping and racing. These kits are an extension of composite spring implementation and the integration of advanced dampeners, aero space bushings and leading edge bearings. Our "Test" driving team is lead by "RAFT" Danny Popp and Dr. Jerry Onks who "Win on Sunday" then we "Sell on Monday." Van Steel engineering and manufacturing partners are, Addco, Hard Bar, Hyperco, JRI and SKF. These kits are current, winning kits that are constantly evolving. We are certain these kits deliver handling, durability and quality results Van Steel is known for. Our parts win championships, not drinks at the bar.

The Base Track/ Entry Level Suspension Package

VS-97500: 1997-2013 **$4,649.99**

- 35mm Front Adjustable Sway Bar Kit
- 25mm Rear Adjustable Sway Bar Kit
- Adjustable Front Hyperco Composite Track Spring
- Adjustable Rear Hyperco Composite Track Spring
- Polyurethane Bushing Kit, Car set for Control Arms
- Premium JRI Front & Rear Double Adjustable Shocks

The Advanced Track Suspension Kit

VS-97501: 97-13 Base (Steel Frame) **$7,299.99**

VS-97502: 06-08 ZO6/ZR1 (Alum Frame) **$7,349.99**

VS-97503: 10-13 ZO6/ZR1 (Alum Frame) **$5,899.99**

- 38mm Front Adjustable Sway Bar Kit
- 25mm Rear Adjustable Sway Bar Kit
- Van Steel Front Adjustable Custom Composite Spring
- Van Steel Rear Adjustable Custom Composite Spring
- Van Steel/HB Advanced Delrin Bushing Kit
- SKF X Tracker Advanced Hub Bearings (excluded VS-97503)
- Premium JRI Front & Rear Double Adjustable Shocks
- Van Steel/HB Alignment Kit

97-13 Camber Plates

Prt No.	Year	Discription	Price
VS-97456	*97-13*	*Upper Control Arm Stud Kit (8 Studs)*	***$104.99***
VS-97458	*97-13*	*Camber Plate & Alignment Kit - Steel Frame*	***$329.99***
VS-97459	*06-13*	*Camber Plate & Alignment Kit - Aluminum Frame*	***$379.99***
VS-97461	*06-13*	*C6 Z06/ZR1 Delrin Bushing Kit – Alum Frame*	***$1265.99***
VS-97462	*97-13*	*Delrin Bushing Kit – Steel Frame*	***$1149.99***

1963-82 Rebuilt Control Arms

Van Steel will completely disassemble, jig and refinish your control arms with new bushings and ball joints. All arms receive gloss black powder coat finish. Cross shafts receive a 2 stage epoxy paint. Choose from Economy ball joints or MOOG ball joints. If you plan on keeping the car, we recommend MOOG ball joints

upper left		lower left	
FS-01 -Rubber	$149.99	FS-18 -Rubber	$159.99
FS-01P -Poly	$159.99	FS-18P -Poly	$163.99
FS-01M -Rubber MOOG	$166.99	FS-18M -Rubber MOOG	$166.99
FS-01PM -Poly MOOG	$176.99	FS-18PM -Poly MOOG	$176.99
upper right		**lower right**	
FS-02 -Rubber	$143.99	FS-19 -Rubber	$159.99
FS-02P -Poly	$159.99	FS-19P -Poly	$163.99
FS-02M -Rubber MOOG	$166.99	FS-19M -Rubber MOOG	$166.99
FS-02PM -Poly MOOG	$176.99	FS-19PM -Poly MOOG	$176.99

ALL FOUR with polyurethane bushings

AR-04 -Rubber Bushings - Economy Ball Joints	$459.99
AR-04P -Poly Bushings - Economy Ball Joints	$499.99
AR-04M -Rubber Bushings - MOOG Ball Joints	$559.99
AR-04PM -Poly Bushings - MOOG Ball Joints	$599.99

1884-96 Rebuilt Control Arms

Van Steel will completely disassemble, jig and refinish your control arms with polyurethane bushings and new ball joints. We chemically clean arms to restore OE finish.

Complete Set

AR-05 -Car Set	$499.99

1997-2013 Rebuilt Control Arms

Van Steel will completely disassemble, jig and refinish your control with Delrin Bushing and New MOOG ball joints. We chemically clean the arms to restore OE Finish.

front

AR-06FD - 97-13 base & ZO6 w/Delrin Bushings	$689.99

rear

AR-06RD - 97-13 w/Delrin Bushings	$689.99
AR-06RZD - 06-13 Z06 w/Delrin Bushings	$689.99

Delrin Bushings

VS-97461 - 06-13 Aluminum Frame Delrin Kit	$1,265.99
VS-97462 - 97-13 Steel Frame Delrin Kit	$1,149.99

1963-82
Front Suspension Rebuild Kits

Prt No.	Description	Price
FKS-01	Economy Kit – Rubber	$269.99
FSK-01P	Economy – Poly	$299.99
FSK-02	Mixed – Rubber	$419.99
FSK-02P	Mixed – Poly	$459.99
FSK-03	All Moog – Rubber	$499.99
FSK-03P	All Moog - Poly	$549.99

Economy Kits - All House Brand Except Moog Idler A-arm. Mixed kits have the upgraded Moog upper & lower ball joints. Everything else in the kit is our house brand line. Moog Idler Arms are included in Economy & Mixed Kits.

Includes:
- *Upper & Lower Ball Joints*
- *Upper & Lower A-Arm Bushings*
- *(2) Inner & (2) Outer Tie Rod Ends*
- *Idler Arm*
- *Sway Bar End Links*

1963-82
Rear Suspension Rebuild Kits

Prt No.	Year	Description	Price
RSM-01	63-74	Standard Kit – Rubber	$234.99
RSM-01P	63-74	Standard Kit – Poly	$244.99
RSM-02	75-82	Standard Kit – Rubber	$234.99
RSM-02P	75-82	Standard Kit – Poly	$244.99
RSM-03	63-74	Deluxe Kit – Rubber	$359.99
RSM-03P	63-74	Deluxe – Poly	$369.99
RSM-04	75-82	Deluxe Kit – Rubber	$359.99
RSM-04P	75-82	Deluxe – Poly	$369.99

Standard Kit Includes:
- *2 Spring Bolts w/Cushions, Nuts, Washers & Retainers*
- *LH & RH Shock Mounts w/Hardware*
- *2 Camber Bolts w/Reducing Washers*
- *Pinion Bushing*
- *Moog Idler Arms are included in Economy & Mixed Kits.*

Deluxe Kit Includes:
- *Standard kit parts*
- *T-Arm Bushings*
- *Rear Alignment Shims*
- *T-Arm Bushing Bolts w/Hardware*
- *Center Spring Bolts*
- *8 Half Shaft to Spindle Flange Bolts*
- *4 French Locks*

1963-82
Front & Rear Super Kit

Prt No.	Year	Description	Price
FRSK-01AE	63-74	Front & Rear Super Kit - Economy Kit - Rubber	$709.99
FRSK-01AM	63-74	Front & Rear Super Kit - All Moog - Rubber	$989.99
FRSK-01BE	63-74	Front & Rear Super Kit - Economy Kit - Poly	$714.99
FRSK-01BM	63-74	Front & Rear Super Kit - All Moog - Poly	$1,009.99
FRSK-02AE	75-82	Front & Rear Super Kit - Economy Kit - Rubber	$709.99
FRSK-02AM	75-82	Front & Rear Super Kit - All Moog - Rubber	$989.99
FRSK-02BE	75-82	Front & Rear Super Kit - Economy Kit - Poly	$714.99
FRSK-02BM	75-82	Front & Rear Super Kit - All Moog - Poly	$1,009.99

1963-96
Poly Bushing Kits

Prt No.	Year	Description	Price
VS-41448	63-82	Front Kit	$119.99
VS-41449E	63-74	Rear Kit	$139.99
VS-41449L	75-82	Rear Kit	$139.99
VS-41550E	63-74	Front & Rear Kit	$249.99
VS-41550L	75-82	Front & Rear Kit	$249.99
VS-84550	84-96	Front Kit	$129.99
VS-84551E	84-87	Rear Kit	$149.99
VS-84551L	88-96	Rear Kit	$149.99
VS-84552	84-96	Front & Rear Kit	$289.99

1963-82
Control Arm Bumpers

Prt No.	Year	Description	Price
CABK-6364	63-64	Control Arm Bumper Kit	$89.99
CABK-6574	65-74	Control Arm Bumper Kit	$41.99
CABK-7582	75-82	Control Arm Bumper Kit	$52.99

SUSPENSION
— composite springs

Overview: Van Steel continues to listen to their customer needs in developing composite springs while adapting new technology to the older cars. With any leaf spring, the matching of the spring's arch to the spring's rate has a direct impact on ride quality, ride height and performance. As you will see, Van Steel has expanded the composite spring selection to more precisely solve our customer's needs. Additionally, Van Steel and its composite partners will entertain new applications.

NEW for 2015: Van Steel continues to expand the fitment and power applications while improving handling and ride quality using composite. Listed below are the part numbers and descriptions. The shortened spring provides spring clearance to the tire.

Base spring	HCO30330	HCO30360	HCO30420
Arch	Medium	Intermediate	Low
Base rate	K=330	K=360	K=420
Shorten 1.00"	HCO30330.1	HCO30360.1	HCO30420.1
Shorten .500"	HCO30330.5	HCO30360.5	HCO30420.5

200 lb. Rate and Standard Arch: HCO12413
63-82 This composite design exemplifies the matching of arch to ride. This composite spring closely matches the OEM Steel 9 Leaf rate of 190 lbs. and OEM arch. The "Easy Ride" spring is a perfect upgrade for cruising with great ride quality. Works well on all 1963 to 82 Corvettes

280 lb. Rate and 7 Leaf Arch: HCO12418F41
63-82 Van Steel composite spring closely matches arch and spring's rate to the OE F41 "gymkhana" 7 leaf steel. This spring improves handling and maintains ride height previously not available in most composite springs. Works well on all 1963 to 82

330 lb. Rate and Standard Arch: HCO12400
63-82 This Van Steel composite spring is more performance oriented with 14% more spring rate than an OEM, Steel, 7 leaf F41 spring. This spring is built on 9 leaf OE arch. With the added rate and high arch we recommend usage on 1973 to 1982 small block and big block cars.

330 lb. Rate and Low Arch: HCO12414LA
63-72 This Van Steel custom composite spring is designed for street performance, has a slightly firmer ride quality, while allowing a lower ride height. This unit is recommended for 400 rear wheel horsepower or less and works well on 1963 to 72.

420 lb. Rate and Low Arch: HCO12414LAHR
63-82 This Van Steel custom composite spring is designed for street and track performance. This spring has a firmer ride quality, while allowing a lower ride height plus controls squat in extreme power down demands. Rear Wheel horsepower is 450 plus.

C4: FE1/Base Front: HCO12410HPS
Rear: HCO12411HPS
These front and rear springs are a direct replacement for the 1984-96 FE1/ base ride package. While maintaining and or restoring original ride height this unit has a soft rated spring by GM specs. The front 1984 -87 applications require an installation kit (p/n HCO-F-8487-Mount)

C4: Z51/Sport Front: HCO12403HPS
Rear: HCO12404HPS
These front and rear springs are a direct replacement and/ or upgrade for the 1984-96 Z51 handing package. Designed for spirited street and light track driving, ride quality is slightly diminished. The front 1984 -87 applications require an installation kit (p/n HCO-F-8487-Mount)

C4: Corvette Challenge
Front: HCO12401HP
Designed for the famous Corvette Challenge this front spring is an exact copy for the track usage with a firm ride. Additionally, for even lower more aggressive ride height you may consider VS32309 lower-ing kit. For the front 1984 -87 applications require an installation kit (p/n HCO-F-8487-Mount)

C5/6 Spirited Street C5/6 Front: HCO12405HPS C5 Rear: HCO12406HPS
These springs are designed for spirited street and HPDE driving with street tires. With a 10% higher spring rate (compared to a Z06) you improve braking with less nose dive, quicker steering response and flatter cornering. Some noise may occur as Delrin low profile adjusters are used.

C5/6 Track C5/6 Front: HCO12407HPT
C5 Rear: HCO12408HPT C6 Rear:HCO12409HPT
These springs are based on GM's T1 race package. We have increased the spring rate 10% and included Delrin ride height adjust. These are for advanced street and entry level track applications.

TRACK WITH AERO:
C5/6 Front: HCO12415AT
Rear C5: HCO12416AT Rear C6: HCO12417AT
These springs have been developed in conjunction with National Champions Dan Popp and Dr. Jerry Onks. As tires and aerodynamics evolve so has the demand for suspensions and springs. These springs' rates are recommended for the extreme, advanced racer. They are custom built to each customer's application using data and feed back from Mr. Popp and Mr. Onks.

1963-82 Leaf Springs

Prt No.	Year	Location	Arch	Rate	Description	Price
HCO12400HPS	1963-82	Rear	OE	K=330	Hyperco Composite Performance Street	$399.99
HCO12413HPS	1963-82	Rear	OE	K=190	Hyperco Composite EZ Ride Spring	$399.99
HCO12414LA	1963-82	Rear	Low	K=350	Van Steel Composite Custom Performance	$399.99
HCO31330.5	1963-82	Rear	Low	K=330	Van Steel 1/2" Shorter Composite Custom Performance	$399.99
HCO31360.5	1963-82	Rear	Low	K=360	Van Steel 1/2" Shorter Composite Custom Performance	$399.99
HCO31420.5	1963-82	Rear	Low	K=420	Van Steel 1/2" Shorter Composite Custom Performance	$399.99
HCO31330.1	1963-82	Rear	Low	K=330	Van Steel 1" Shorter Composite Custom Performance	$399.99
HCO31360.1	1963-82	Rear	Low	K=360	Van Steel 1" Shorter Composite Custom Performance	$399.99
HCO31420.1	1963-82	Rear	Low	K=420	Van Steel 1" Shorter Composite Custom Performance	$399.99

1984-96 Leaf Springs

Prt No.	Year	Location	Arch	Rate	Description	Price
HCO12410VSE	1984-87	Front	FE1	K=330	Van Steel Custom Composite Spring - FE1	$499.99
HCO12410VSL	1988-96	Front	FE1	K=330	Van Steel Custom Composite Spring - FE1	$499.99
HCO12410VSE	1984-87	Front	Z51	K=	Van Steel Custom Composite Spring - FE1	$499.99
HCO12410VSL	1988-96	Front	Z51	K=	Van Steel Custom Composite Spring - FE1	$499.99
HCO12403HPS	1984-96	Front	Z51	K=660	Hyperco Composite Spring, Z51, OEM Replacement	$499.99
HCO12411HPS	1984-96	Rear	FE1	K=228	Hyperco Composite Spring FE1 OEM Replacement	$439.99
HCO12404HPS	1984-96	Rear	Z51	K=326	Hyperco Composite Spring, Z51 OE Replacement	$439.99

1997-2013 Leaf Springs

Prt No.	Year	Location	Arch	Rate	Description	Price
HCO12405HPS	1997-13	Front	Z06+	K=571	Hyperco Composite Spring, Z06 OE Design	$565.99
HCO12407HPT	1997-13	Front	T1+	K=634	Hyperco Composite Spring T1 Design	$565.99
HCO12415AT	1997-13	Front	Low	K=1000+	Van Steel Composite Custom, Aero	$699.99
HCO12406HPS	1997-04	Rear	Z06+	K=777	Hyperco Composite Spring, Z06 OE Design	$565.99
HCO12408HPT	1997-04	Rear	T1+	K=850	Hyperco Composite Spring T1 Design	$565.99
HCO12416AT	1997-04	Rear	Low	K=1000+	Van Steel Custom Spring, Aero	$699.99
HCO12409HPT	2005-13	Rear	T1+	K=850	Hyperco Composite Spring T1 Design	$565.99
HCO12417AT	2005-13	Rear	Low	K=900+	Van Steel Custom Spring, Aero	$699.99

1963-2013 Bushings & Adjusters

Prt No.	Year	Location	Description	Price
SG-11P8K	1963-82	Rear	8 Inch Spring Tension Bolt Kit w/Poly Bushing	$39.99
SG-11PK-C4	1984-96	Rear	8 Inch Spring Tension Bolt Kit w/Poly Bushing	$39.99
SG-11PK-C5	1997-04	Rear	8 Inch Spring Tension Bolt Kit w/Poly Bushing	$39.99
HCO-HB-C5/6-ADJ	1997-12	FT or RR	97-12 Hard Bar Spring Adjuster (pair)	$49.99
SG-06L8	1997-12	FT or RR	8" Spring Bolts w/Nyloc Nuts	$19.99
SG-06L10	1997-12	FT or RR	10" Spring Bolts w/Nyloc Nuts	$26.99

FRONT SUSPENSION
63-82

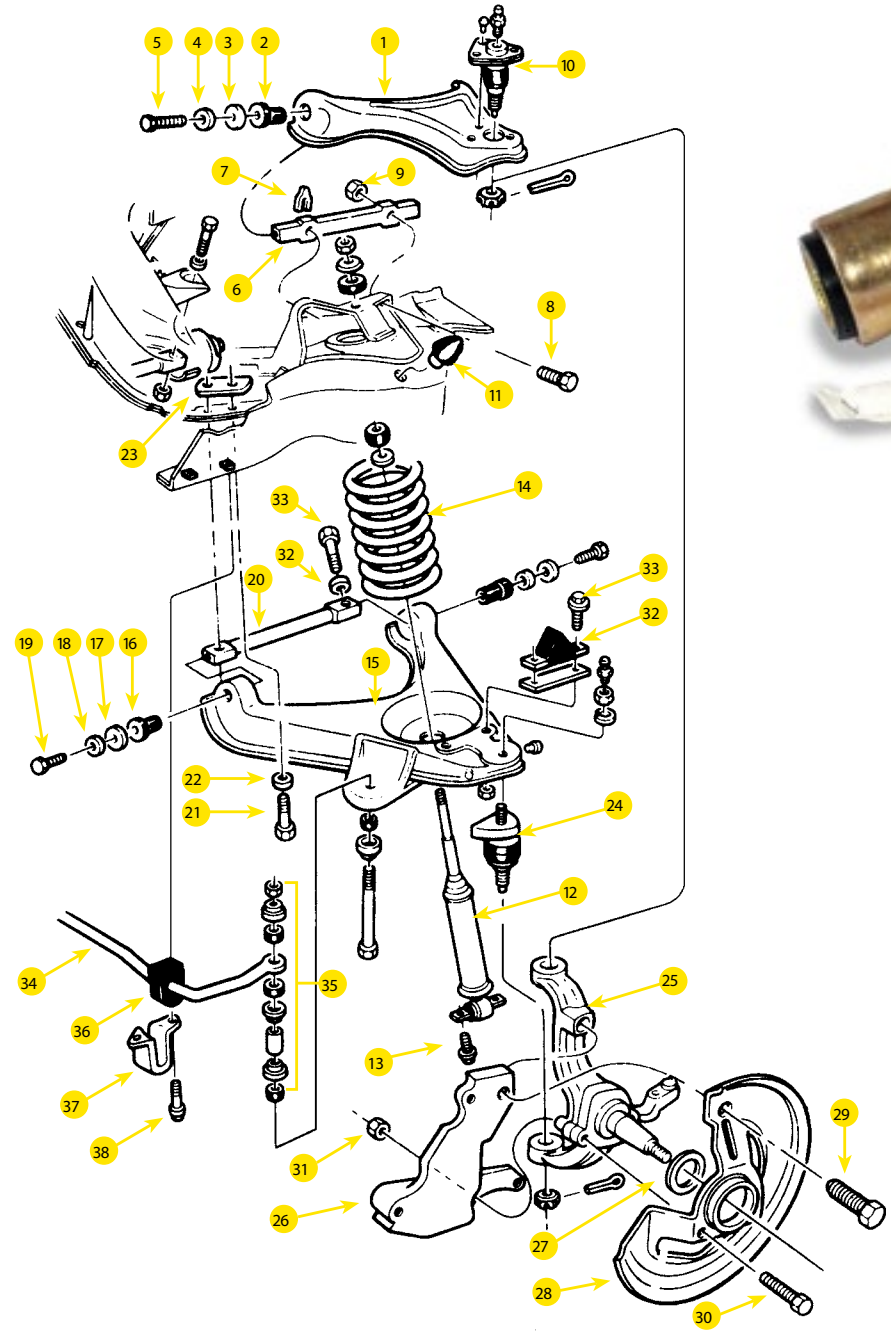

FS-03PK

FS-04

FS-09E

1963-82 Front Suspension

Prt No.	Ilus No.	No. Car	Year	Description	Price
FS-01	*1*	*1*	*63-82*	*Rebuilt LH Upper A-Arm*	***See Pg. 11***
FS-02	*1*	*1*	*63-82*	*Rebuilt RH Upper A-Arm*	***See Pg. 11***
FS-03K	*2*	*4*	*63-82*	*Upper A-Arm Bushings –Rubber (Car Set)*	***$17.99***
FS-03PK	*2*	*4*	*63-82*	*Upper A-Arm Bushing – Poly (Car Set)*	***$39.99***
FS-03G	*2*	*4*	*63-82*	*Upper A-Arm Bushings – Correct (Car Set)*	***$48.99***
FS-04	*3*	*4*	*63-82*	*Upper A-Arm Retaining Washer*	***$3.99***

FS-47

FS-28

FS-17

FS-42

Exclusive Van Steel Design

FS-27

1963-82 Front Suspension

Prt No.	Ilus No.	No. Car	Year	Description	Price
FS-05	4	4	63-82	3/8" Lock Washer	$0.99
FS-06	5	4	63-82	Upper A-arm Bushing Bolt	$0.99
FS-07K	5	4	63-82	Upper A-Arm Cross Shaft Kit	TEMP DISC.
FS-07-OS	6	2	63-82	Offset Upper A-Arm Shaft Kit	$69.99
FS-09E	8	4	63-67	Upper A-Arm Alignment Stud	$6.99
FS-09L	8	4	68-82	Upper A-Arm Alignment Stud	$6.99
FS-11	10	2	63-82	Upper Ball Joint - Economy	$24.99
FS-11B	10	2	63-82	Upper Ball Joint - MOOG	$71.99
FS-12	11	2	63-82	Front Upper Bump Stop	$6.99
FS-14	12	2	63-82	Front KYB GR2 Shock	$44.99
FS-16	13	4	63-82	Lower Shock Mount Bolts (Car Set)	$7.99
FS-17	14	2	63-82	Small Block Coil Springs (460#'s)	$84.99
FS-17B	14	2	63-82	Big Block Coil Springs (550#'s)	$84.99
FS-18	15	2	63-82	Rebuilt LH Lower A-Arm	See Pg. 11
FS-19	15	2	63-82	Rebuilt RH Lower A-Arm	See Pg. 11
FS-20K	16	4	63-82	Lower Rubber A-Arm Bushings (Car Set)	$21.99
FS-20PK	16	4	63-82	Lower Poly A-Arm Bushings (Car Set)	$39.99
FS-21	17	4	63-82	Lower A-Arm Retaining Washer	$2.99
FS-22	18	4	63-82	7/16" Lock Washer	$0.99
FS-23	19	4	63-82	Lower A-Arm Bushing Bolt	$0.99
FS-24K	20	2	63-82	Lower A-Arm Cross Shaft Kit	CALL
FS-27	23	2	63-82	2 Hole Plate w/Bolts (Per Side)	$16.99
FS-28	32	2	63-82	Lower A-Arm Rear Bolt w/Nut	$3.99
FS-31	24	2	63-82	Lower Ball Joint – Economy	$26.99
FS-31B	24	2	63-82	Lower Ball Joint – MOOG	$51.99
FS-36E	25	2	63-68	Front Spindle w/Steering Arm	$195.99
FS-36L	25	2	69-82	Front Spindle w/Steering Arm	$195.99
FB-08C	28	1	63-82	RF Backing Plate – Correct	$47.99
FB-08G	28	1	63-82	RF Backing Plate – Gold	$30.99
FB-08S	28	1	63-82	RF Backing Plate – Silver	$30.99
FB-09C	28	1	63-82	LF Backing Plate – Correct	$47.99
FB-09G	28	1	63-82	LF Backing Plate – Gold	$30.99
FB-09S	28	1	63-82	LF Backing Plate – Silver	$30.99
FB-11	27	2	63-82	Front Spindle Gasket (pair)	$7.99
FB-12E	26	1	63-82	LH Front Caliper Mounting Bracket	$49.99
FB-12L	26	1	63-82	LH Front Caliper Mounting Bracket	$29.99
FB-13E	26	1	63-82	RH Front Caliper Mounting Bracket	$49.99
FB-13L	26	1	63-82	RH Front Caliper Mounting Bracket	$29.99
FB-15CE	–	2	63-68	New Front Hub Complete w/Bearings	$239.99
FB-15C	–	2	69-82	New Front Hub Complete w/Bearings	$239.99
FS-37	29	2	65-82	Front Upper Backing Plate Bolt (Pair)	$24.99
FS-38	30	4	63-82	Front Lower Spindle Bolt w/Nut	$2.99
FS-42	–	2	63-68	Front Wheel Bearing Kit	$34.99
FS-44	–	2	69-82	Front Wheel Bearing Kit	$36.99
FS-46	–	2	63-68	Front Spindle Nut Washer	$4.99
FS-47	–	2	69-82	Front Spindle Nut Washer	$4.99

1963-82 Front Suspension

Prt No.	Ilus No.	No. Car	Year	Description	Price
BA-41	–	2	63-68	3/4-20 Spindle Nut	$3.99
FS-48	–	2	69-82	Spindle Nut	$12.99
CF-18	–	2	63-82	Cotter Pin - 1/8 x 1-1/2	$0.99
FS-49	–	2	63-68	Grease Cap	$7.99
FS-50	–	2	69-82	Grease Cap	$5.99
FS-52	32	2	63-82	Lower A-Arm Bump Stop	$7.99
FS-57P	35	2	63-82	Poly Sway Bar End Link Kit (pr)	$22.99
FS-71P	–	2	63-82	Poly Ball Joint Boots (Car Set)	$11.99
FS-72P	–	4	63-82	Poly Tie Rod End Boots (pr)	$6.99
SK-01	7	–	63-82	Front Alignment Shim Kit	$19.99
ASB-B	36	1	63-82	Poly Sway Bar Bushings	SEE PG 36

FS-49

FS-71P

Exclusive Van Steel Design

69-82 Front Hub
FB-15C

FS-57P

SK-01

conversion & rebuild kits

1963-74
P/S Conversion Kits

Upgrade your 1963-74 Corvette manual steering system with a power steering conversion kit. Quality components and hardware insure improved handling along with driver comfort. All conversion kits have a one year limited warranty.

- *Power Steering Control Valve and Cylinder*
- *Power Steering Pump*
- *Centerlink, Hoses and Pitman Arm*
- *Brackets and Hardware*
- *2 Pints of Power Steering Fluid*
- *Detailed Instructions*

VS-22854 63-74 Small Block *(non hypo)*..... $973.99
VS-22855 63-74 Small Block *(hypo only)* $973.99
VS-22856 65-69 Big Block..... $1229.99
VS-22857 70-74 Big Block..... $1229.99

1963-82 P/S Rebuilt Component Kit

VS-22851 63-79 *(small block)* $339.99
VS-22852 80-82 *(big block)* $339.99
VS-22853 65-74 *(big block)* $339.99
Core Charge (30 days)..... $160.00

Component Kit includes rebuilt valve and rebuilt cylinder (both shown above), new hoses and 2 pints of fluid.

1963-82 Power Steering Hose Kits

VS -21821 63-79 SB $71.99
VS -21822 80-82 ..... $71.99
VS -21823 65-74 BB $71.99

1963-82
Rebuilt & New P/S Valves

VS -12801 Rebuilt Valve..... $143.99

New seals, bolts, stone, shield and tube seats. Pressure tested and adjusted. 5 year limited warranty. Price shown is exchange. ***Core charge $100.00***

1963-82
Rebuilt & New P/S Cylinder

VS -12802 Rebuilt Valve..... $122.99

All new chrome shafts, seals, tube seats, cushions and hardware. Pressure tested. 5 year limited warranty. Price shown is exchange. ***Core charge $100.00***

1963-82
Borgeson Steering Boxes

Convert your leaky OE power steering valve and cylinder to a true power steering Borgeson Box. Fits in the stock location as OE steering box and offers a quicker steering ratio of 12.7:1. Included with the box for factory P/S cars are new lines that get plumbed right to the OE P/S pump, new steering coupler and an adapter that screws onto your factory center link. Just re-use your OE pitman arm.

GB-BORG-E 63-66
w/Factory Power Steering $839.99
GB-BORG-L 67-82
w/Factory Power Steering $839.99
GB-BORG-EM 63-66
w/Factory Manual Steering $1009.99
GB-BORG-LM 67-82
w/Factory Manual Steering $1009.99

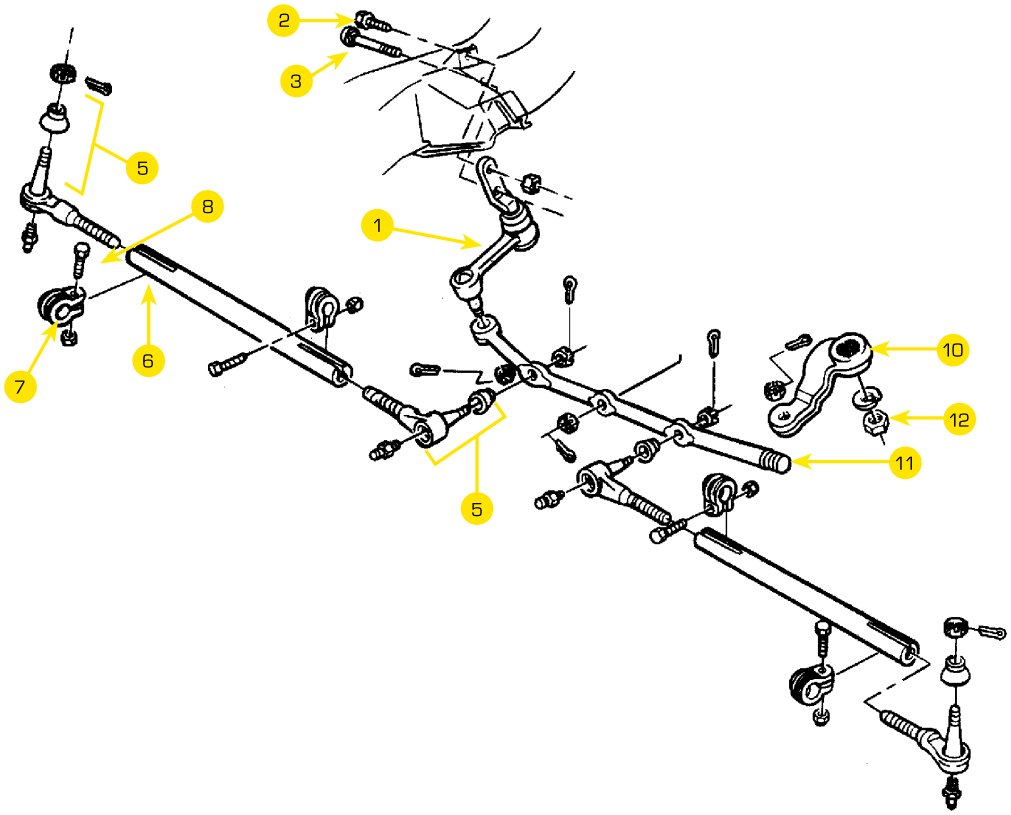

ST-01

ST-0708

ST-09 - *Bar*

ST-25

ST-26P

1963-82 steering

Prt No.	Ilus No.	No. Car	Year	Description	Price
ST-01B	*1*	*1*	*63-82*	*Idler Arm - Moog*	***$99.99***
ST-03	*2*	*1*	*63-82*	*Upper Idler Arm Bolt w/Nut*	***$0.99***
ST-04	*3*	*1*	*63-82*	*Lower Idler Arm Bolt w/Nut*	***$4.99***
ST-07	*5*	*1*	*63-82*	*LH Threaded Tie Rod End - House Brand*	***$22.99***
ST-07B	*5*	*1*	*63-82*	*LH Threaded Tie Rod End - Moog*	***$45.99***
ST-08	*5*	*1*	*63-82*	*RH Threaded Tie Rod End - House Brand*	***$22.99***
ST-08B	*5*	*1*	*63-82*	*RH Threaded Tie Rod End - Moog*	***$45.99***
ST-0708-BS	*5*	*1*	*63-82*	*LH Thread Bump Steer Tie Rod Ends (pr)*	***$99.99***
ST-09	*6*	*2*	*63-82*	*Tie Rod Sleeve w/Clamps, Nuts & Bolts*	***$33.99***
ST-09HD	*6*	*2*	*63-82*	*HD Tie Rod Sleeves (pr)*	***$49.99***
ST-10	*7*	*4*	*63-82*	*Tie Rod Clamp, Nut & Bolt*	***$5.99***
ST-13	*10*	*1*	*63-76*	*Pitman Arm - Non Power Steering - Used*	***$49.99***
ST-14	*10*	*1*	*63-82*	*Pitman Arm - Factory Power Steering - Used*	***$49.99***
ST-18	*–*	*1*	*63-67*	*Non Power Steering Absorber - Replacement*	***$122.99***
ST-18C	*–*	*1*	*63-67*	*Non Power Steering Absorber - Correct*	***$143.99***
ST-20	*11*	*1*	*63-82*	*Center link - Power - New*	***$179.99***
ST-21	*11*	*1*	*63-76*	*Center link - Non Power - New*	***$179.99***
ST-25	*–*	*1*	*63-82*	*Boot, Clamp w/out Stud*	***$39.99***
ST-25S	*–*	*1*	*63-82*	*N/P Center Link Master Rebuild Kit*	***$99.99***
ST-27K	*–*	*1*	*63-82*	*Tie Rod Ends (4pc)*	***$79.99***
ST-27KM	*–*	*1*	*63-82*	*Tie Rod Ends - MOOG- (4pc)*	***$165.99***
ST-27P	*–*	*2*	*63-82*	*Poly Tie Rod End Boots (pr)*	***$6.99***

GBK-01

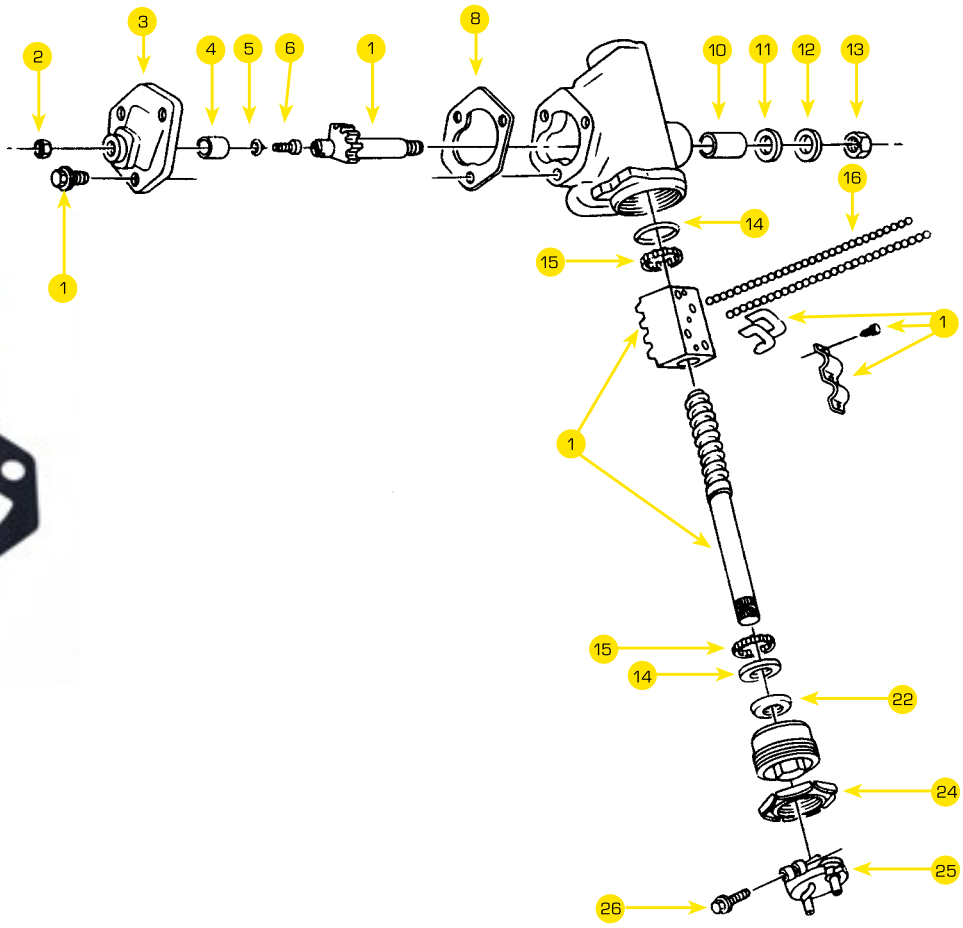

GB-27L

GB-32

1963-82 steering box

Prt No.	Ilus No.	No. Car	Year	Description	Price
GB-25A	2	1	63-66	Lower Steering Coupler - Non Telescopic	$102.99
GB-25B	2	1	67-69	Lower Steering Coupler w/Ground	$102.99
GB-25C	2	1	63-66	Complete Steering Coupler w/Ground - Non Telescopic	$154.99
GB-25D	2	1	63-66	Complete Steering Coupler w/Ground - Telescopic	$154.99
GB-25E	2	1	67-69	Complete Steering Coupler	$163.99
GB-25F	2	1	69-82	Steering Coupler	$51.99
GB-27E	–	1	63-69	Steering Box Rebuild	$189.99*
GB-27L	–	1	69-82	Steering Box Rebuild	$189.99*
GB-27EN	–	1	63-69	New Box Rebuild	$404.99
GB-24LN	–	1	69-82	New Box Rebuild	$404.99
GB-32	–	1	63-82	Steering Box Carriage Bolt Kit (3)	$14.99
GBK-01	–	1	63-82	Steering Box Rebuild Kit	$81.99

NOTE 69 Non-Power Steering should refer to Early steering parts. 69 Power Steering should refer to Late steering parts. See website for individual steering box parts. **SEE WEB FOR INDIVIDUAL STEERING BOX PARTS.**

*** Add a $100 Core Charge for Exchange Units**

BEARING ASSEMBLY
63-82

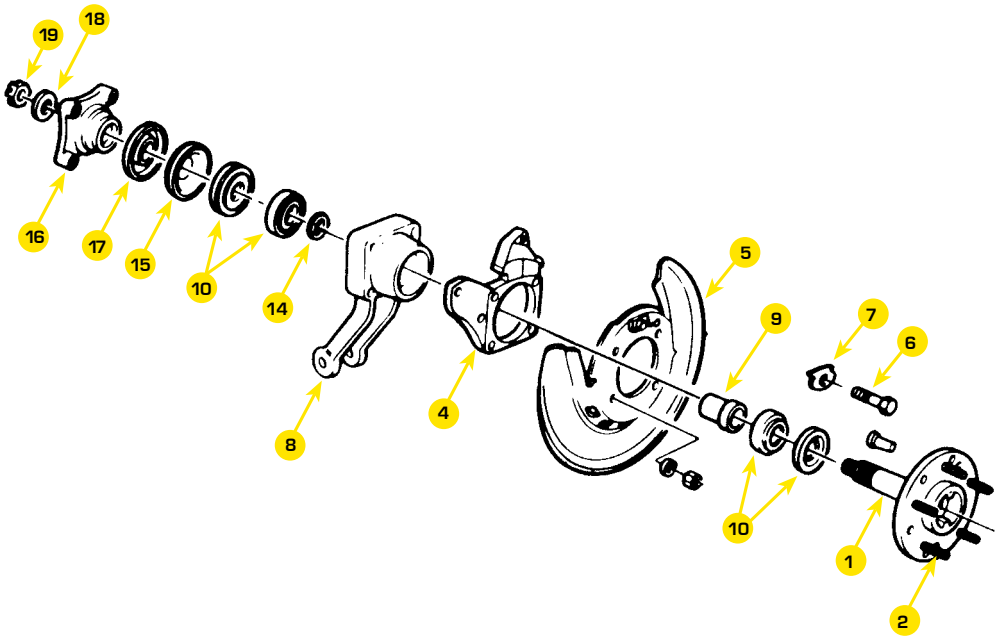

BA-01

BA-28

BA-13S

BA-21

BA-27

1963-82 Bearing Assembly

Prt No.	Ilus No.	No. Car	Year	Description	Price
BA-01	*1*	*2*	*63-64*	*Drum Brake Spindle*	***$194.99***
BA-02	*1*	*2*	*65-82*	*Disc Brake Spindle*	***$139.99***
BA-02A	*1*	*2*	*65-82*	*Disc Brake Spindle - American Made*	***$174.99***
BA-03	*2*	*20*	*63-64*	*Drum Spindle Lug Stud*	***$2.99***
BA-04	*2*	*20*	*65-82*	*Disc Spindle Lug Stud*	***$1.99***
BA-04R	*2*	*4*	*63-82*	*ARP 7/16-20x3 Lug Stud (5)*	***$20.99***
BA-09	*4*	*1*	*65-82*	*New LH Caliper Mounting Bracket*	***$129.99***
BA-10	*4*	*1*	*65-82*	*New RH Caliper Mounting Bracket*	***$129.99***
BA-13S	*5*	*1*	*65-74*	*LH Backing Plate - Silver - Repro*	***$30.99***
BA-13G	*5*	*1*	*75-82*	*LH Backing Plate - Gold - Repro*	***$30.99***
BA-13C	*5*	*1*	*65-74*	*LH Backing Plate - Silver - Correct*	***$47.99***
BA-14S	*5*	*1*	*65-74*	*RH Backing Plate - Silver - Repro*	***$30.99***
BA-14G	*5*	*1*	*75-82*	*RH Backing Plate - Gold - Repro*	***$30.99***
BA-14C	*5*	*1*	*65-74*	*RH Backing Plate - Silver - Correct*	***$47.99***
BA-15	*6*	*2*	*65-82*	*Parking Brake Anchor Bolt*	***$1.99***
BA-16	*7*	*2*	*65-82*	*Parking Brake Shoe Guide Plate*	***$3.99***
BA-42	*–*	*2*	*65-82*	*Parking Brake Anchor*	***$14.99***
BA-21	*8*	*1*	*63-82*	*New LH Bearing Support - American Made*	***$249.99***
BA-22	*8*	*1*	*63-82*	*New RH Bearing Support - American Made*	***$249.99***
BA-27	*10*	*1*	*63-82*	*Rear Wheel Bearing & Seal Kit/Per Wheel*	***$37.99***
BA-28	*9*	*2*	*63-82*	*Bearing Support Spacer*	***$14.99***

HS-11

1963-82 Bearing Assembly

Prt No.	Ilus No.	No. Car	Year	Description	Price
BA-38	14	–	63-82	Rear Bearing Shim & Spacer Kit (2 Spacers, 9 Shims)	$46.99
BA-39	10	2	63-82	Bearing Support Dust Shield	$5.99
BA-40	10	2	63-82	Spindle Nut Washer	$7.99
BA-41	13	2	63-82	Spindle Nut	$4.99
CF-16	–	2	63-82	Spindle Nut Cotter Pin	$0.99
HS-11	14	2	63-79	New Spindle Flange	$84.99
HS-12	14	2	80-81	Spindle Flange – Auto – Used	$149.99
HS-13	14	2	80-82	Spindle Flange – 4 Spd – All 82 – Used	$149.99
HS-14	15	2	63-82	Spindle Flange Shield	$5.99
HS-15	–	2	63-79	French Locks (4 pck)	$7.99

FB-8490

1984-96 Bearings

Prt No.	Ilus No.	No. Car	Year	Description	Price
FB-8490	–	2	84-90	Front Timken Hub Bearing - American Made	$245.99
FB-9196	–	2	91-96	Front Timken Hub Bearing - American Made	$399.99
RB-8496	–	2	84-96	Rear Timken Hub Bearing - American Made	$209.99

1997-2013 Bearings

Prt No.	No. Car	Year	Description	Price
FB-9708	2	97-08	Front Timken Hub Bearing – American Made	$276.99
FBRB-9708SKF	4	97-08	Front/Rear SKF Racing Hub Bearing	$389.99
FBRB-9708SKFHD	4	97-08	Front/Rear SKF Racing Hub Bearing w/HD Stud	$404.99
RB-9708	2	97-08	Rear Timken Hub Bearing – American Made	$264.99
FBRB-1013	4	10-12	Front/Rear ZR1 Hub Bearing	$409.99
FBRB-BOLT KIT	4	10-12	Bearing Bolt Kit (4 per car)	$39.99

FBRB-9708SKF

FBRB-BOLT KIT

BA-38

STRUT ROD
63-82

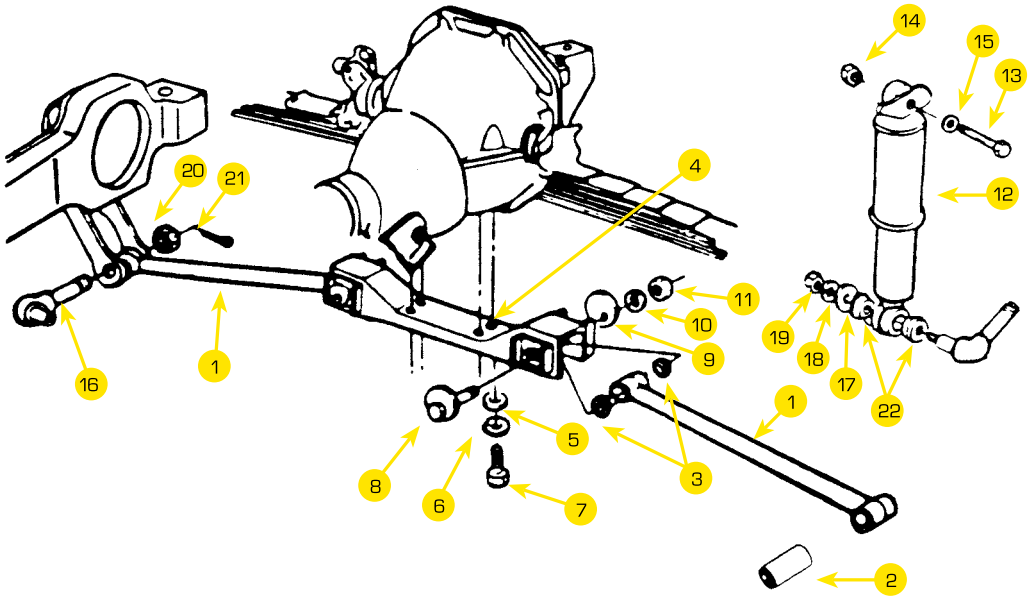

SR-05

SR-07

1963-82 strut rod

Prt No.	Ilus No.	No. Car	Year	Description	Price
SR-02	*1*	*2*	*63-74*	*New Strut Rod - Factory Style*	***$57.99***
SR-03	*1*	*2*	*75-79*	*New Strut Rod - Factory Style*	***$57.99***
SR-04	*1*	*2*	*80-82*	*New Strut Rod - Factory Style*	***$57.99***
SR-05	*1*	*2*	*63-82*	*Adjustable Strut Rods w/Forged Ends - Poly*	***$153.99***
SR-05L	*1*	*2*	*80-82*	*Adjustable Strut Rods w/Forged Ends - Poly*	***$153.99***
SR-06	*2*	*4*	*63-74*	*Rubber Strut Rod Bushing (ea)*	***$15.99***
SR-06P	*2*	*4*	*63-74*	*Poly Strut Rod Bushing (car set)*	***$39.99***
SR-07	*2*	*4*	*75-82*	*Rubber Strut Rod Bushing (ea)*	***$15.99***
SR-07P	*2*	*4*	*75-82*	*Poly Strut Rod Bushing (car set)*	***$39.99***
SR-08K	*3*	*4*	*63-82*	*Strut Rod Reducing Washers (4 pcs)*	***$7.99***
SR-13	*7*	*4*	*63-82*	*Strut Rod Bracket Mounting Bolts w/Washers (car set)*	***$1.99***
SS-01K	*1*	*2*	*63-79*	*Smart Strut w/Poly Bushings*	***$245.99***
SS-02	*1*	*2*	*80-82*	*Smart Strut w/Poly Bushings*	***$256.99***

SR-06P

SS-01

1963-82 strut rod

Prt No.	Ilus No.	No. Car	Year	Description	Price
SR-17K	–	2	63-82	Camber Bolt Kit (pr)	$27.99
SR-18	12	2	63-82	Rear KYB GR-2 Shocks	SEE PAGE 8
SR-20K	13	2	63-82	Upper Shock Mount Bolt w/Lock Washer & Nut	$2.99
SR-21K	16	1	63-82	LH Shock Mount w/Hardware	$47.99
SR-22K	16	1	63-82	RH Shock Mount w/Hardware	$47.99

SR-17

(left)
SR-21

(right)
SR-22

SR-206P

SR-18

1984-96 strut rod

Prt No.	Ilus No.	No. Car	Year	Description	Price
SR-08K	–	1	84-89	Strut Rod Reducing Washers (4 pcs)	$7.99
SR-17K	–	1	84-96	Camber Bolt Kit (pr)	$27.99
SR-204P	–	1	84-87	Strut Rod Bushing - Poly	$30.99
SR-205P	–	1	88-96	Strut Rod Bushing - Poly	$30.99
SR-206	–	1	84-96	Adjustable Strut Rods - Poly	$153.99
SS-03	1	1	84-96	Smart Struts w/Poly	$274.99

WHEEL BEARING UNITS
rebuilt & new

Rebuilds = You send us your parts in to Rebuild

Exchanges = We front you the parts first and charge you a core charge. Cores are refunded when your parts arrive back to Van Steel and have been evaluated.

New = All new parts, NO core.

1963-82
Rear Wheel Bearings

Rebuilt Unit
– We Rebuild Your Unit

Prt No.	Description	Price
BAR-42-L/R	Rebuilt Bearing Assembly - No Rotor	$209.99
BAR-42D-L/R	Drum Brake Bearing Assembly	$204.99
BAR-43-L/R	Rebuilt Bearing Assembly - With Rotor	$289.99

Exchange Unit
– Add $300 Core Per Side

Prt No.	Description	Price
BAE-42-L/R	Rebuilt Bearing Assembly - No Rotor	$264.99
BAE-42D-L/R	Drum Brake Bearing Assembly w/New Spindle	$289.99
BAE-43-L/R	Rebuilt Bearing Assembly - With Rotor	$289.99

New Unit – No Core

Prt No.	Description	Price
BAN-42-L/R	New Bearing Assembly - No Rotor	$699.99
BAN-42D-L/R	Drum Brake Bearing Assembly (Used Backing Plate)	$418.99
BAN-43-L/R	New Bearing Assembly - With Rotor	$799.99

Your bearing assemblies are disassembled, jig fit and measured, cleaned and receives a two-stage epoxy finish. The assembly is then blueprinted to Van Steel's standards and returned to you with a new backing plate, Timken bearings, races and SKF seals packed w/Timken synthetic grease.

BAR-44S

1963-82 T-Arm Assemblies

Rebuilt Unit
– We Rebuild Your Unit

Prt No.	Description	Price
BAR-44S-L/R	Rebuilt T-Arm Assemblies w/ New Rotor	ea. $409.99
BAR-44D-L/R	Rebuilt Drum Brake T-Arms	ea. $245.99

Exchange Unit
– Add $450 Core Per Side

Prt No.	Description	Price
BAE-44-L/R	Rebuilt T-Arm Assemblies w/ New Rotor	ea. $409.99
BAE-44D-L/R	Rebuilt Drum Brake T-Arms	ea. $409.99

Your bearing assemblies are disassembled, jig fit and measured, cleaned and receives a two-stage epoxy finish. The trailing arms are finished w/a durable powder coat and new rubber bushings. The assembly is than blueprinted to Van Steel's standards and returned to you with a new backing plate, Timken bearings, races and SKF seals packed w/Timken synthetic grease. New stainless steel parking brake hardware, GM style shoes and rotor will also be fitted to these units. Rotor run out will be completed as well. This ready to bolt-on unit comes to you with a lifetime warranty.

New Unit – No Core

Prt No.	Description	Price
BAN-44-L/R	New T-Arm Assemblies w/New Rotor	ea. $1,099.99
BAN-43D-L/R	New Drum T-Arm Assemblies	ea. $819.99

All drum brake assemblies come with refurbished backing plates. New are not available

Van Steel builds a blueprinted rear wheel trailing arm assembly using all new parts. New trailing arm, new backing plate, new caliper mounting bracket and a new bearing support are used. Timken bearings, races and SKF seals packed w/Timken synthetic grease are included. New stainless steel parking brake hardware, GM style shoes and rotor will also be fitted to these units. Rotor run out will be completed as well. This ready to bolt-on unit comes to you with a lifetime warranty.

1963-82
Off-set Trailing Arm Assemblies

Rebuilt Unit
– We Rebuild Your Unit

Prt No.	Description	Price
BAOR-44-L/R	Rebuilt Bearing Assemblies w/Offset T-Arms	$1156.99
BAOJR-44-L/R	Rebuilt Bearing Assemblies w/Johnny Joint Offsets (pr)	$1369.99

Exchange Unit
– Add $250 Core Per Side

Prt No.	Description	Price
BAOE-44- L/R	Rebuilt Bearing Assemblies w/Offset T-Arms	$1229.99
BAOJE-44-L/R	Rebuilt Bearing Assemblies w/Johnny Joint Offsets (pr)	$1599.99

New Unit – No Core

Prt No.	Description	Price
BAON-44-L/R	New Bearing Assemblies w/Offset T-Arms	$1899.99
BAOJN-44-L/R	Rebuilt Bearing Assemblies w/Johnny Joint Offsets (pr)	$2049.99

1963-82
Off-set Trailing Arms

Prt No.	Description	Price
TA-06	Standard Offset T-Arm	$499.99
TA-06D	Double Offset T-Arm	$529.99

- *Improved Design Improves Ease of Installation*
- *Increases Wheel Backspace Clearance Over Stock T-Arms*
- *Accepts OEM Size Nose Bushings*
- *Durable Gloss Black Powder Coating Finish*
- *Van Steel Limited Lifetime Warranty*

T-arm is offset 2 inches. By running an offset trailing arm, it will allow you to run a wider tire on a stock rim or run a wider aftermarket rim and tire. T-Arms come powder coated gloss black and come with poly bushings. All arms are made in America. They are 1/4"thick, c-channel, laser cut and jig welded.

The differences between the (TA-06) standard offset t-arms and the (TA-06D) double offset t-arms is that the double offsets have the spring bolt hole moved in 1" on each side. You must buy a 1" shortened spring (per side). Customers use the double offsets when they run a 15" or 16" tire package. The additional inboard clearance is crucial b/c of side wall flex during a turn. If you plan on running a 17" wheel or taller, we would recommend you run a standard offset arm. On a 17" wheel you still may have to buy a shortened spring but that will depend on rims width. We recommend you call us with what you have in mind, and we can help guide you in the right direction.

Trailing Arms w/Johnny Joints

Prt No.	Description	Price
TA-06-JJ	Standard Offset T-Arm w/Johnny Joints	$714.99

- *Lighter Weight*
- *Greaseable Johnny Joints w/Poly Bushing*
- *Greatly Reduces Pivot Friction*
- *Minimum Alignment Deflection*
- *Offset Arm Allows for Larger Rear Tire*
- *Gloss Black Powder Coat*

T-arm is offset 2 inches. By running an offset trailing arm, it will allow you to run a wider tire on a stock rim or run a wider aftermarket rim and tire. T-Arms come powder coated gloss black and come with poly bushings. All arms are made in America. They are 1/4"thick, c-channel, laser cut and jig welded.

WARNING: **If you are using Van Steel offset trailing arms for any other use besides the intended design for a steel leaf spring or composite spring, this WILL void any warranty.**

TRAILING ARMS
63-96

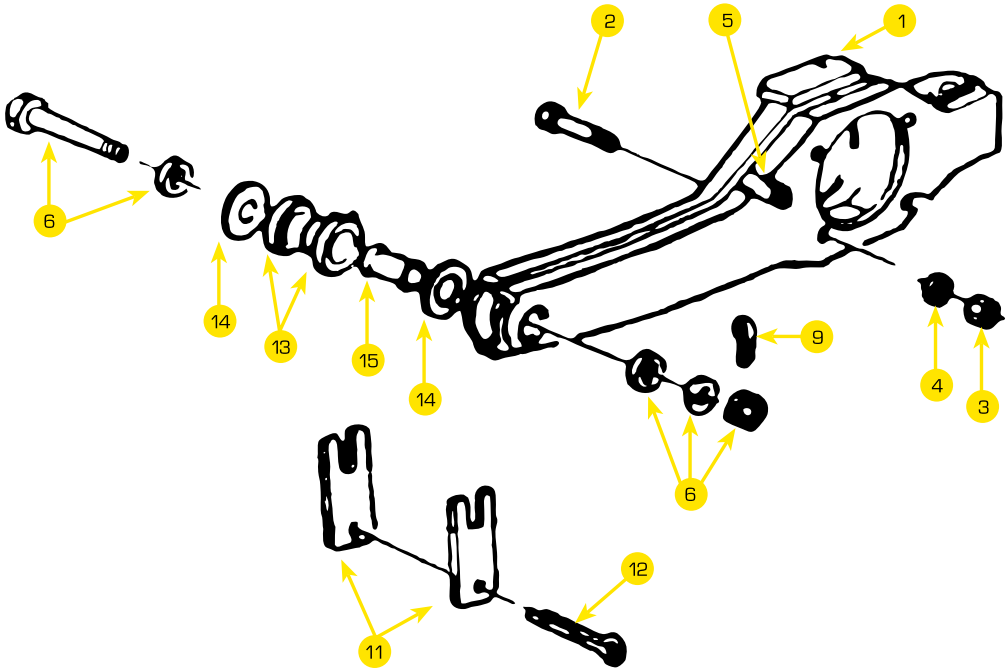

TA-08K

TA-16S

Close-up of Johnny Joints

TA-06-J

1963-82 trailing arm

Prt No.	Ilus No.	No. Car	Year	Description	Price
TA-01	1	1	63-64	Drum Brake T-Arm – LH	$239.99
TA-02	1	1	63-64	Drum Brake T-Arm – RH	$239.99
TA-03	1	1	65-82	Disc Brake T-Arm – LH	$239.99
TA-04	1	1	65-82	Disc Brake T-Arm – RH	$239.99
TA-06	–	1	63-82	Offset T-Arms (pr)	$499.99
TA-06D	–	1	65-82	Double Offset T-Arms (pr)	$529.99
TA-06J	–	1	65-82	Offset T-Arms w/Johnny Joints	$714.99
TA-08K	2	2	65-82	T-Arm Stud Kit (per side)	$6.99
TA-09	5	2	65-82	Parking Brake Cable Guide	$1.99
SG-08	–	4	63-82	Spring Bolt Cushion Retainer	$2.99
TA-16S	11	16	63-82	SS T-Arm Alignment Shim Kit	$47.99
TA-17	12	2	63-82	T-Arm Alignment Shim Cotter Pin	$1.99
TA-18P	13	2	63-82	Poly T-Arm Bushing Kit (pr)	$69.99
TA-18JRK	–	2	63-82	Johnny Joint Rebuild Kit (per side)	$19.99
TA-21	13	2	63-82	Rubber T-Arm Bushing Kit (per side)	$21.99
TA-22	6	2	63-82	T-Arm Bolt Kit (per side)	$10.99
TA-23S	6	1	63-82	T-Arm Bolt & Stainless Steel Shim Kit (both sides)	$61.99

1984-96 trailing arm

Prt No.	Ilus No.	No. Car	Year	Description	Price
TA-206H	–	1	84-96	Adjustable T-Arms w/Heim Joints	$459.99
TA-206P	–	1	84-96	Adjustable T-Arms w/Forged Ends – Poly	$319.99
TA-207	–	1	84-96	T-Arm Bushings – Poly	$69.99

Trailing Arms Rebuild Kits

Prt No.	Year	Description	Price
TARK-6574L	65-74	Left Hand T-Arm Rebuild Kit	**$151.99**
TARK-6574R	65-74	Right Hand T-Arm Rebuild Kit	**$151.99**
TARK-7582L	75-82	Left Hand T-Arm Rebuild Kit	**$151.99**
TARK-7582R	75-82	Right Hand T-Arm Rebuild Kit	**$151.99**

- *Gold/Silver Backing Plate*
- *Parking Brake Hardware*
- *Parking Brake Shoes*
- *4 - Trailing Arm Mounting Studs w/Lock Washers and Nuts*
- *5 - Lug Studs*
- *Inner and Outer Timken Bearings*
- *Inner and Outer National Seals*
- *Bearing Spacer and Shim Kit*
- *Trailing Arm Cable Guide*
- *Guide Plate*
- *2 - French Locks*
- *4 - 7/16-20 Bolts for the Half Shaft Flange to Spindle Flange*
- *Bearing Support Dust Shield*
- *Rubber Trailing Arm Bushings w/Sleeve and Washers*
- *Spindle Nut*
- *Spindle Nut Washer*
- *Spindle Nut Cotter Pin*

63-64 Front Disk Break Conversion

Prt No.	Description	Price
BCKF-6364	Front Disk Brake Conversion Kit	**$1,339.99**

New Bearings, Seals, Races, Backing Plates, New Rotors, Stainless Steel Sleves, O-Ring Calipers, Reconditioned Spindles, Caliper Brakets, Tie Rod Supports, New Rubber Hoses and Brake Pads.
No core charge required

63-64 Rear Disk Break Conversion

Prt No.	Description	Price
BCKR6364	Rear Disc Brake Conversion Kit	**$2,299.99**

Rebuilt Bearing Assembly (Bearing, Races & Seals), New Spindle, Caliper Mounting Bracket, New Stainless Steel Hardware Kit, New GM Style Shoes, New Backing Plates, New Rotors and T- Arms, Stainless Steel Sleves, O-Ring Calipers, Brake Pads & Hoses.
No core charge required

REAR SUSPENSION
63-82

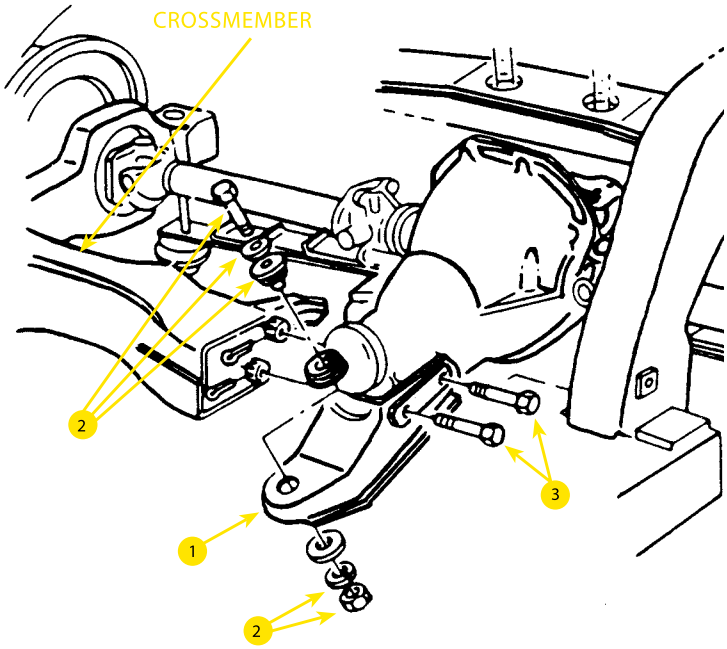

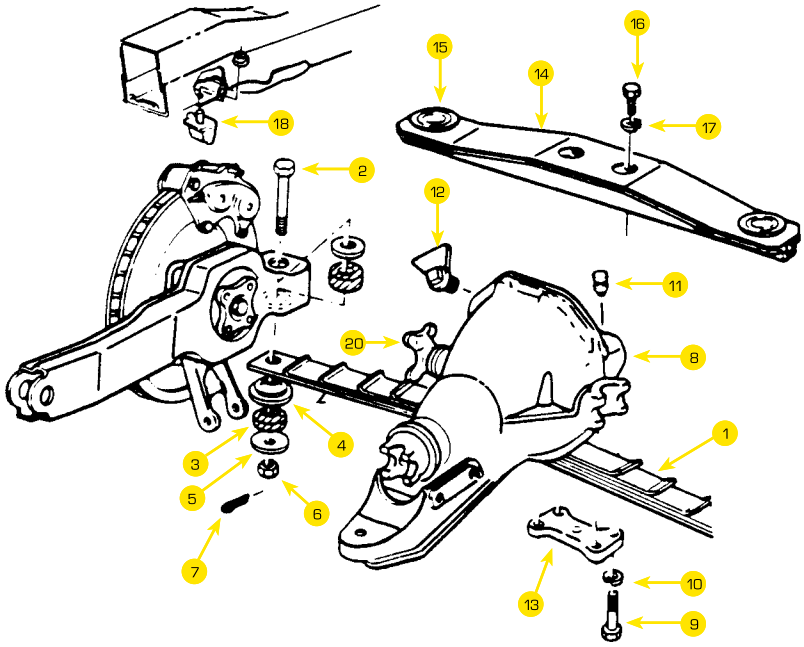

FC-09P

SG-24

1963-82 front carrier mount

Prt No.	Ilus No.	No. Car	Year	Description	Price
FC-03	1	1	63-64	Diff Carrier Mounting Bracket	***CALL***
FC-04	1	1	65-68	Diff Carrier Mounting Bracket	***CALL***
FC-05	1	1	69-79	Diff Carrier Mounting Bracket	***CALL***
FC-09R	2	1	63-82	Rubber Pinion Bushing	***$29.99***
FC-09P	2	1	63-82	Poly Pinion Bushing	***$27.99***
FC-10	3	1	63-64	Diff Bracket Bolt Kit	***$11.99***
FC-11	3	1	65-68	Diff Bracket Bolt Kit	***$14.99***
FC-12	3	1	69-79	Diff Bracket Bolt Kit	***$14.99***

1963-82 rear spring

Prt No.	Ilus No.	No. Car	Year	Description	Price
SG-01	1	1	63-77	9 Leaf Rear Spring - 190lb	***$256.99***
SG-01L	1	5-7	63-77	Spring Liner	***$12.99***
SG-02	1	1	63-77	7 Leaf Rear Spring - 290lb	***$256.99***
SG-04	1	1	78-79	9 Leaf Rear Spring	***$409.99***
SG-06	2	2	63-82	6" Spring Bolt, Nut & Cotter Pin	***$11.99***
SG-06L8	2	1	63-82	8" Spring Bolts w/Nut (Pr)	***$19.99***
SG-07	3	4	63-82	Rubber Spring Bolt Cushion	***$2.99***
SG-07P	3	1	63-82	Poly Spring Bolt Cushions (Car Set)	***$22.99***
SG-08	4	4	63-82	Spring Cushion Retainer	***$2.99***
SG-09	5	4	63-82	Spring Cushion Washer	***$2.99***

SG-36R

SG-47

Exclusive
Van Steel Design

SG-12

SG-08

SG-32

1963-82 rear spring

Prt No.	Ilus No.	No. Car	Year	Description	Price
SG-11P6K	2-7	1	63-82	6" Spring Bolt Kit w/Poly	$35.99
SG-11R6K	2-7	1	63-82	6" Spring Bolt Kit w/Rubber	$35.99
SG-11P8K	2-7	1	63-82	8" Spring Bolt Kit w/Poly	$39.99
SG-12	8	1	63-77	HD Rear End Cover	$169.99
SG-13	8	1	78-79	HD Rear End Cover	$169.99
SG-15	–	1	63-79	Rear End Cover Gasket	$5.99
SG-17K	9	1	63-77	Spring Plate Bolt Kit	$9.99
SG-18K	9	1	78-79	Spring Plate Bolt Kit	$9.99
SG-19K	9	1	80-82	Spring Plate Bolt Kit	$9.99
SG-20	11	1	63-82	Vent Tube	$3.99
SG-21	12	1	68-64	Diff Fill Plug	$14.99
SG-24K	13	1	63-77	Rear Spring Plate W/Bolts	$31.99
SG-25K	13	1	78-79	Rear Spring Plate W/Bolts	$31.99
SG-26K	13	1	80-82	Rear Spring Plate W/Bolts	$41.99
SG-28	14	1	63-79	Cross Member	$409.99
SG-29	15	1	63-79	Diff Cross Member Bushings (pr)	$133.99
SG-30	16	4	63-79	Diff Cross Member to Cover/Cover Bolt	$0.99
SG-31	18	2	66-75	Rear Bump Stop	$12.99
SG-31E	18	2	63-64	Rear Bump Stop	$36.99
SG-32	18	2	76-82	Rear Bump Stop	$18.99
SG-34-HD	–	2	63-82	Lucas Diff Fluid	$13.99
SG-35	–	–	63-82	GM Posi Additive	$15.99
SG-36	20	2	63-79	Rebuilt Side Yoke, Cap Style	$98.99
SG-36R	20	2	63-79	Rebuilt Side Yoke, U-Bolt Style	$98.99
SG-37	20	2	63-79	New Side Yokes - Cap Style	$134.99
SG-37R	20	2	63-79	New Side Yokes – U-Bolt Style	$134.99
SG-39PY-1310	–	1	63-69	1310 Pinion Flange w/U-Bolts – 30 Spline	$143.99
SG-39PY-1330	–	1	63-69	1330 Pinion Flange w/U-Bolts – 30 Spline	$143.99
SG-39PY-1350	–	1	63-69	1350 Pinion Flange w/U-Bolts – 30 Spline	$189.99
SG-47	–	1	63-79	Diff Cross Member Reinforcement Kit	$40.99
SG-80	–	1	80-82	Rear Crossmember Poly Bushings	$30.99
DK-01	–	1	63-79	Timken Diff Rebuild Kit w/o Yoke Bearings/Seals	$129.99
DK-01-YB	–	2	63-79	Differential Side Yoke Bearing	$18.99
DK-01-YS	–	2	63-79	Differential Side Yoke Seal	$8.99
DK-02	–	1	80-82	Timken Diff Rebuild Kit w/o Yoke Bearings/Seals	$149.99
DK-02-YB	–	2	80-82	Differential Side Yoke Bearing	$20.99
DK-02-YS	–	2	80-82	Differential Side Yoke Seal	$18.99

HALF SHAFTS
63-96

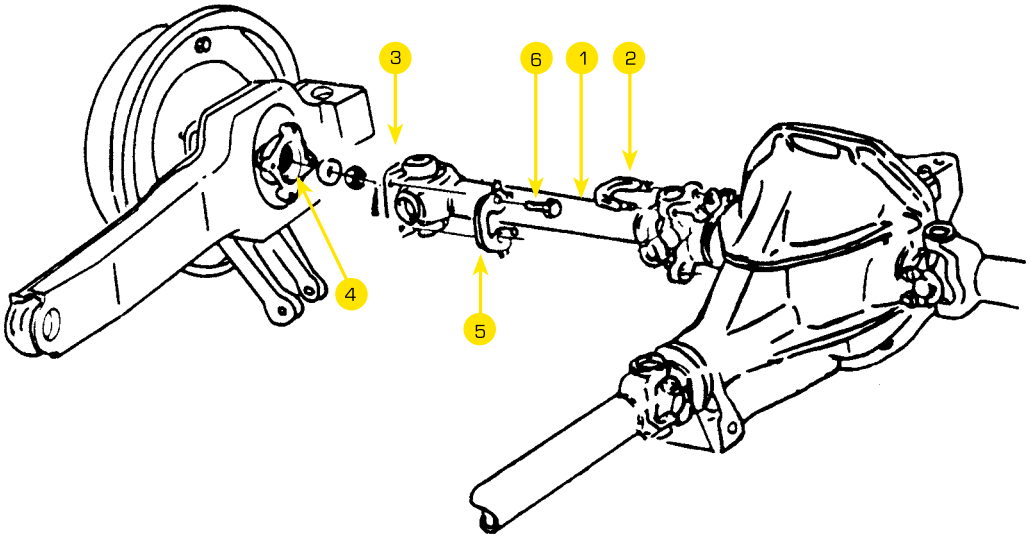

HS-01

HS-07
w/o grease fitting

1963-82

Prt No.	Ilus No.	No. Car	Year	Description	Price
HS-06	–	*4*	*63-79*	*Half Shaft U-Joint w/Grease Fitting (1350)*	***$26.99***
HS-07	–	*4*	*63-79*	*Half Shaft U-Joint w/out Grease Fitting (1350)*	***$22.99***
DS-790S	–	*4*	*80-82*	*Half Shaft/Drive Shaft U-Joint – Solid Spicer (1330)*	***$28.99***
HS-09	*2*	*4*	*63-79*	*Half Shaft U-Bolt*	***$8.99***
HS-10	*3*	*2*	*63-79*	*Half Shaft Flange*	***$51.99***
HS-11	*4*	*2*	*63-79*	*New Spindle Flange*	***$84.99***
HS-12	*4*	*2*	*80-81*	*Spindle Flange – Auto – Used*	***$149.99***
HS-13	*4*	*2*	*82*	*Spindle Flange – 4 Spd – All 82 – Used*	***$149.99***
HS-14	–	*2*	*63-82*	*Spindle Flange Shield*	***$5.99***
HS-15	*5*	*4*	*63-79*	*63-79 – French Locks (4 pck)*	***$7.99***
RB-31	*6*	*8*	*65-82*	*Half Shaft Flange to Spindle Flange Bolt*	***$1.99***
RB-31K	*6*	*8*	*65-82*	*Half Shaft Flange to Spindle Flange Bolt Kit (8 pcs)*	***$10.99***
HS-18	–	*4*	*63-79*	*Solid Spicer Half Shaft U-Joint*	***$34.99***
HS-19	*2*	*8*	*80-81*	*Auto U-Joint Strap w/Bolts*	***$13.99***
HS-20	*2*	*8*	*80-82*	*Manual U-Joint Strap w/Bolts*	***$13.99***
HS-23	*2*	*1*	*63-79*	*HD Cap & Bolt Kit*	***$61.99***
HS-25	–	*4*	*63-79*	*Driveshaft U-Joint U-Bolts (pr)*	***$8.99***
HS-26	–	*4*	*80-82*	*Driveshaft U-Joint Strap w/Bolts*	***$8.99***
HS-28K	–	*1*	*80-81*	*HD Cap & Bolt Kit*	***$132.99***
HS-29K	–	*1*	*80-82*	*HD Cap & Bolt Kit*	***$122.99***

HS-12

HS-15

HS-23

1963-96 half shaft

Prt No.	Ilus No.	No. Car	Year	Description	Price
HS-24E	*1*	*2*	*63-74*	*Half Shaft Rebuild w/House Brand Joints*	***$88.99***
HS-24ES	*1*	*2*	*63-74*	*Half Shaft Rebuild w/Solid Spicer Joints*	***$98.99***
HS-24L	*1*	*2*	*75-79*	*Half Shaft Rebuild w/House Brand Joints*	***$88.99***
HS-24LS	*1*	*2*	*75-79*	*Half Shaft Rebuild w/Solid Spicer Joints*	***$98.99***
HS-80	*1*	*2*	*80-81*	*(Auto) Half Shaft Rebuild w/House Brand Joints*	***$88.99***
HS-80S	*1*	*2*	*80-81*	*Auto) Half Shaft Rebuild w/Solid Spicer Joints*	***$98.99***
HS-81	*1*	*2*	*80-81*	*(4sp – All 82) Half Shaft Rebuild w/House Brand Joints*	***$88.99***
HS-81S	*1*	*2*	*80-82*	*(4sp – All 82) Half Shaft Rebuild w/Solid Spicer Joints*	***$98.99***
HS-84	*1*	*2*	*84-96*	*Half Shaft Rebuild w/House Brand Joints*	***$88.99***
HS-84S	*1*	*2*	*84-96*	*Half Shaft Rebuild w/Solid Spicer Joints*	***$98.99***

HS-08
w/grease fitting

HS-17

HS-25

HS-26

HS-24L

DIFFERIENTIALS & HALF SHAFTS

1963-96
Heavy Duty Side Yoke Kit

Prt No.	Year	Description	Price
HS-23	63-79	Side Yoke Kit	$61.99
HS-28K	80-81	Auto Side Yoke Kit	$132.99
HS-29K	80-82	Manual and ALL 82 Side Yoke Kit	$122.99
HS-230K	84-96	Side Yoke Kit	$122.99

1963-82
New Half Shaft Kits

Prt No.	Year	Description	Price
HS-01	63-74	Half Shaft w/Spicer U-Joints	$249.99
HS-01E	63-74	Half Shaft w/House U-Joints	$199.99
HS-01P	63-74	Half Shaft w/Spicer U-Joints (pr)	$429.99
HS-01PE	63-74	Half Shaft w/House U-Joints (pr)	$379.99
HS-02	75-79	Half Shaft w/Spicer U-Joints	$249.99
HS-02E	75-79	Half Shaft w/House U-Joints	$199.99
HS-02P	75-79	Half Shaft w/Spicer U-Joints (pr)	$429.99
HS-02PE	75-79	Half Shaft w/House U-Joints (pr)	$379.99
HS-02PA	75-79	Half Shaft w/House U-Joints – Aluminum (pr)	$599.99
HS-03	80-81 Auto	Half Shaft w/Spicer U-Joints	$199.99
HS-03E	80-81 Auto	Half Shaft w/House U-Joints	$167.99
HS-03P	80-81 Auto	Half Shaft w/Spicer U-Joints (pr)	$429.99
HS-03PE	80-81 Auto	Half Shaft w/House U-Joints (pr)	$379.99
HS-04	80-81 4sp ALL 82	Half Shaft w/Spicer U-Joints	$199.99
HS-04E	80-81 4sp ALL 82	Half Shaft w/House U-Joints	$167.99
HS-04P	80-81 4sp ALL 82	Half Shaft w/Spicer U-Joints (pr)	$429.99
HS-04PE	80-81 4sp ALL 82	Half Shaft w/House U-Joints (pr)	$379.99

****House brand U-Joints are either AC Delco or Neapco U-Joints****
****All HS-02 Part Numbers will work on the 63-74 cars****

1980-82
Cast Iron Diff Conversion

Prt No.	Description	Price
8082-CONV-1350	Cast Iron Rear End Conversion	$3,649.99
8082-CONV-1350C	Cast Iron Rear End Conversion w/Offsets	$5,299.99
8082-CONV-1480C	Cast Iron Rear End Conversion w/Offsets	$6,599.99

1963-96
Rear End Rebuilds, Gears & Spline Axles

Prt No.	Year	Description	Price
REAR6379	63-79	Rear End Rebuild	$649.99
GS-308	63-79	3:08 US Gear Ring & Pinion	$379.99
GS-336	63-79	3:36 US Gear Ring & Pinion	$379.99
GS-355	63-79	3:55 US Gear Ring & Pinion	$379.99
GS-373	63-79	3:73 US Gear Ring & Pinion	$379.99
GS-411T	63-79	Thick 4:11 US Gear Ring & Pinion	$379.99
GS-390	63-79	3:90 Ring & Pinion	$379.99
HSHP-01	63-79	1480 Series 30 Spline Kit (kit only)	$3,199.99
HSHP-03	63-79	1480 Kit Plus Your Differential and T-Arms Rebuilt	$4,599.99
HSHP-04	63-79	1350 Series 30 Spline Kit (kit only)	$1,699.99
HSHP-04C	63-79	1350 Kit Plus Your Differential and T-Arms Rebuilt	$3,299.99
HSHP-04I	63-79	1350 30 Spline Inner Axles w/ Flanges	$529.99
HSHP-04O	63-79	1350 30 Spline Outer Axles w/ Flanges	$1,299.99
HSHP-05	63-79	17 Spline Inner Axles w/Flanges	$529.99
SPG-01	63-79	30 Spline Spider Gears	$289.99
SPC-01	63-79	Steel Posi Clutch Pack	$199.99

1963-96
Rebuilt Half Shaft Kits

Prt No.	Year	Description	Price
HS-24E	63-74	Half Shaft Rebuild – House U-Joints	$88.99
HS-24ES	63-74	Half Shaft Rebuild – Spicer U-Joints	$98.99
HS-24L	75-79	Half Shaft Rebuild – House U-Joints	$88.99
HS-24LS	75-79	Half Shaft Rebuild – Spicer U-Joints	$98.99
HS-81E	80-81 Auto	Half Shaft Rebuild – House U-Joints	$88.99
HS-81S	80-81 Auto	Half Shaft Rebuild – Spicer U-Joints	$98.99
HS-82E	80-81 4sp ALL 82	Half Shaft Rebuild – House U-Joints	$88.99
HS-82S	80-81 4sp ALL 82	Half Shaft Rebuild – Spicer U-Joints	$98.99
HS-8496	84-96	Half Shaft Rebuild – House U-Joints	$88.99
HS-8496S	84-96	Half Shaft Rebuild – Spicer U-Joints	$98.99

****House brand U-Joints are either AC Delco or Neapco U-Joints****

ANTI-SWAY BAR
kits, bushings, end links

1963-82 Sway Bars

Prt No.	Year	Description	Price
ASB-F-2266	63-82	1 3/8"/35MM Tubular Front Sway Bar	$299.99
ASB-F-760	63-82	1-1/8" Solid Front Sway Bar	$189.99
ASB-F-761	63-82	1-1/4" Solid Front Sway Bar Kit	$189.99
ASB-F-856	63-82	1" Solid Front Sway Bar Kit	$189.99
ASB-R-347	63-82	5/8" Solid Rear Sway Bar kit	$149.99
ASB-R-OS-347	63-79	5/8" Solid Off Set Rear Sway Kit	$249.99
ASB-R-907	63-82	7/8" Solid Rear Sway Bar Kit	$149.99
ASB-R-913	63-82	3/4" Solid Rear Sway Bar Kit	$149.99
ASB-R-987	63-82	3/4" Solid Rear Sway Bar Kit - OEM Style	$199.99

1985-96 Sway Bars

Prt No.	Year	Description	Price
ASB-F-2168	85-87	Front Anti-Sway Bar Kit - 32mm	$256.99
ASB-F-2170	88-96	Front Tubular Sway Bar - 32MM/1-1/4"	$256.99
ASB-F-2172	88-96	Front Tubular Sway Bar Kit - 35mm/1-3/8"	$256.99
ASB-R-2175	84-96	Rear Tubular Sway Bar 25.4MM/1"	$230.99

1997-13 Sway Bars

Exclusive Van Steel Design

Prt No.	Year	Description	Price
ASB-F-4620	97-12	Front Adjustable Tubular Sway Bar - 35mm - 2 Hole	$299.99
ASB-R-2461	97-12	Rear Adjustable Tubular Sway Bar - 25.4mm - 3 hole	$269.99

Sway Bars for street/strip or all out racing. Give us a call if you need help in determining the best bar setup for you needs.

ANTI-SWAY BAR
bushings & parts

Prt No.	Year	Description	Price
ASB-B-1	63-82	Poly Sway Bar Mounting Bushings - 1”	**$19.99**
ASB-B-1-1/4	63-82	Poly Sway Bar Mounting Bushings - 1-1/4”	**$19.99**
ASB-B-1-1/8	63-82	Poly Sway Bar Mounting Bushings - 1-1/8”	**$19.99**
ASB-B-15/16	63-82	Poly Sway Bar Mounting Bushings - 15/16”	**$19.99**
ASB-B-3/4	63-82	Poly Sway Bar Mounting Bushings - 3/4”	**$19.99**
ASB-B-5/8	63-82	Poly Sway Bar Mounting Bushings - 5/8”	**$19.99**
ASB-B-7/8	63-82	Poly Sway Bar Mounting Bushings - 7/8”	**$19.99**
ASB-B-9/16	63-82	Poly Sway Bar Mounting Bushings - 9/16”	**$19.99**

Prt No.	Year	Description	Price
ASB-B-22MMF	84-87	Front Sway Bar Bushings w/End Links - 22MM	**$26.99**
ASB-B-22MMFL	84-96	Front Sway Bar Bushings w/End Links - 22MM	**$37.99**
ASB-B-24MMF	84-87	Front Sway Bar Bushings w/End Links - 24MM	**$26.99**
ASB-B-24MMFL	84-96	Front Sway Bar Bushings w/End Links - 24MM	**$37.99**
ASB-B-26MMF	84-87	Front Sway Bar Bushings w/End Links - 26MM	**$26.99**
ASB-B-26MMFL	84-96	Front Sway Bar Bushings w/End Links - 26MM	**$37.99**
ASB-B-30MMF	84-87	Front Sway Bar Bushings w/End Links - 30MM	**$26.99**
ASB-B-30MMFL	84-96	Front Sway Bar Bushings w/End Links - 30MM	**$37.99**
ASB-B-32MMF	84-87	Front Sway Bar Bushings w/End Links - 32MM	**$26.99**
ASB-B-32MMFL	84-96	Front Sway Bar Bushings w/End Links - 32MM	**$37.99**
ASB-B-19MM	84-96	Rear Sway Bar Bushings w/End Links - 19MM	**$31.99**
ASB-B-22MM	84-96	Rear Sway Bar Bushings w/End Links - 22MM	**$31.99**
ASB-B-24MM	84-96	Rear Sway Bar Bushings w/End Links - 24MM	**$31.99**
ASB-B-26MM	84-96	Rear Sway Bar Bushings w/End Links - 26MM	**$31.99**

Prt No.	Year	Description	Price
ASB-B-C5/6-23MMF	97-12	Front Sway Bar Frame Mount Bushings - 23MM	**$16.99**
ASB-B-C5/6-26MMF	97-12	Front Sway Bar Frame Mount Bushings - 26MM	**$16.99**
ASB-B-C5/6-30MMF	97-12	Front Sway Bar Frame Mount Bushings - 30MM	**$16.99**
ASB-B-C5/6-32MMF	97-12	Front Sway Bar Frame Mount Bushings - 32MM	**$16.99**
ASB-B-C5/6-38MMF	97-12	Front Sway Bar Frame Mount Bushings - 38MM	**$16.99**
ASB-B-C5/6-19MMR	97-12	Rear Sway Bar Frame Mount Bushings - 19MM	**$16.99**
ASB-B-C5/6-22MMR	97-12	Rear Sway Bar Frame Mount Bushings - 22MM	**$16.99**
ASB-B-C5/6-24MMR	97-12	Rear Sway Bar Frame Mount Bushings - 24MM	**$16.99**
ASB-B-C5/6-26MMR	97-12	Rear Sway Bar Frame Mount Bushings - 26MM	**$16.99**
ASB-B-C5/6-27MMR	97-12	Rear Sway Bar Frame Mount Bushings - 27MM	**$16.99**
ASB-C5/6-Heim	97-13	Sway Bar Racing Heim Joint End Link Kit	**$79.99**

1997-13 Sway Bar Racing Heim Joint End Link Kit

#ASB-E-Heim

SB-07

CF-30

SB-09

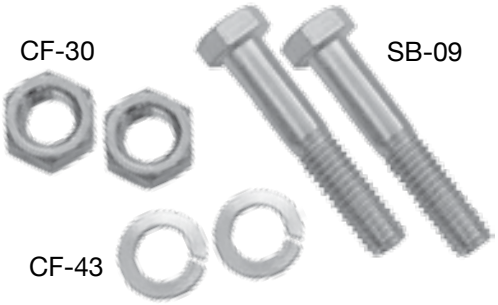

CF-43

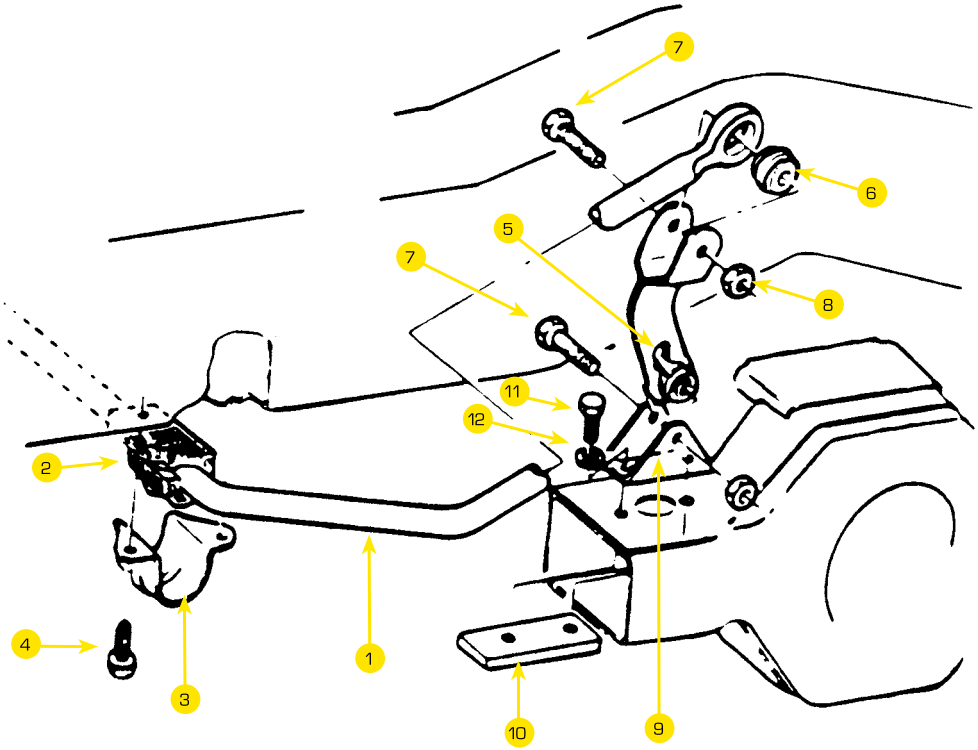

SB-10

1963-82 rear OE anti-sway bar parts

Prt No.	Ilus No.	No. Car	Year	Description	Price
SB-06	*4*	*1*	*65-82*	*Front/Rear Sway Bar Frame Mount Bolt Kit*	***$2.99***
SB-07	*5*	*2*	*65-82*	*Rear Sway Bar End Link*	***$17.99***
SB-08	*6*	*1*	*65-82*	*Rear Sway Bar Bushing – Rubber*	***$9.99***
SB-08P	*6*	*1*	*65-82*	*Rear Sway Bar Bushings – Poly (car set)*	***$24.99***
SB-09	*7*	*2*	*66-82*	*Sway Bar End Link Bolt Kit*	***$3.99***
SB-10	*9*	*2*	*66-82*	*Sway Bar End Link Bracket on T-Arm*	***$8.99***
SB-11	*10*	*2*	*66-82*	*2-Hole Plate for End Link Bracket*	***$8.99***
SB-12	*11*	*1*	*66-82*	*2-Hole Plate Bolts (4)*	***$1.99***

SB-11

SB-12

SB-08

SB-08P

WILWOOD BRAKE KITS
63-present

1997-08

Forged Narrow Superlite 6R Big Brake Front Brake Kit: The unsurpassed braking capacity of the Forged Narrow Superlite 6R six-piston caliper serves as the base of this group of 13”-14” big rotor kits for these popular late model vehicles. FNSL6R kits are engineered application specific for simplified installation and full compatibility with OE master cylinder output and ABS functions where used. Big brake kits provide increased brake capacity and complimentary style with wheel, tire, and suspension upgrades on show cars and high performance street/track machines. Optional caliper finishes and rotor designs simplify personalizing the style and braking requirements of any application.

Forged Narrow Superlite 4R Big Brake Rear Brake Kit For OE Parking Brake: Forged Narrow Superlite 4R four piston calipers are combined with BP-10 compound pads and 13”-14” rotors in this group of big brake kits for custom high performance street and show machines. This group of specialized kits for Corvette retains full use of the OE parking brake, master cylinder output, and ABS where used. FNSL4R rear kits provide complimentary style and performance with 13” and larger front brake upgrades in conjunction with wheel, tire, and suspension upgrades. Optional caliper finishes and rotor designs enable the builder to match style and performance on all application

2014+ Parts Numbers on page 60

65-82 Wilwood “D8” 4 Piston Caliper Kits

Prt No.	Description	Price
BKW-140-10789	Front Caliper Kit - Clear Coated - Includes Pads & Lines	$499.99
BKW-140-10789-BK	Front Caliper Kit - Black Calipers - Includes Pads & Lines	$649.99
BKW-140-10789-RD	Front Caliper Kit - Red Calipers - Includes Pads & Lines	$649.99
BKW-140-10790	Rear Caliper Kit - Clear Calipers - Includes Pads & Lines	$499.99
KW-140-10790-BK	Rear Caliper Kit - Black Calipers - Includes Pads & Lines	$649.99
BKW-140-10790-RD	Rear Caliper Kit - Red Calipers - Includes Pads & Lines	$649.99

65-82 Wilwood “D8” 6 Piston Caliper Kits

Prt No.	Description	Price
BKW-140-11857	Front Caliper Kit D8 6 Piston Caliper – Clear - Includes Pads & Lines	$682.99
BKW-140-11857-BK	Front Caliper Kit D86 Piston – Black - Includes Pads & Lines	$849.99
BKW-140-11857-BK-TL	Front Caliper Kit D8 6 Piston w/Thermlock Pistons – Black - Includes Pads & Lines	$1,049.99
BKW-140-11857-RD	Front Caliper Kit D86 Piston – Red - Includes Pads & Lines	$849.99
BKW-140-11857-RD-TL	Front Caliper Kit D8 6 Piston w/Thermlock Pistons – Red - Includes Pads & Lines	$1,049.99

65-82 Wilwood Big Brake Caliper Kits

Prt No.	Description	Price
BKW-140-10616	Front Black SL6R 2 Piece 13” - Slotted	$1,494.99
BKW-140-10616-D	Front Black SL6R 2 Piece 13” - Drilled & Slotted	$1,594.99
BKW-140-10616-DR	Front Red SL6R 2 Piece 13” - Drilled & Slotted	$1,594.99
BKW-140-10616-R	Front Red SL6R 2 Piece 13” - Slotted	$1,494.99
BKW-140-10617	Front Black SL6R 2 Piece 14” - Slotted	$1,619.99
BKW-140-10617-D	Front Black SL6R 2 Piece 14” - Drilled & Slotted	$1,719.99
BKW-140-10617-DR	Front Red SL6R 2 Piece 14" - Drilled & Slotted	$1,719.99
BKW-140-10617-R	Front Red SL6R 2 Piece 14” - Slotted	$1,619.99
BKW-140-10471	Rear Black SL4R 13” 2 Piece - Slotted	$1,494.99
BKW-140-10471-D	Rear Black SL4R 13” 2 Piece - Slotted & Drilled	$1,594.99
BKW-140-10471-DR	Rear Red SL4R 13” 2 Piece - Slotted & Drilled	$1,594.99
BKW-140-10471-R	Rear Red SL4R 13” 2 Piece - Slotted	$1,494.99
BKW-140-10472	Rear Black SL4R 14" 2 Piece - Slotted	$1,619.99
BKW-140-10472-D	Rear Black SL4R 14" 2 Piece - Slotted & Drilled	$1,719.99
BKW-140-10472-DR	Rear Red SL4R 14” 2 Piece - Slotted & Drilled	$1,719.99
BKW-140-10472-R	Rear Red SL4R 14” 2 Piece - Slotted	$1,619.99

85-87 Wilwood Brake Kits

Prt No.	Description	Price
BKW-140-11918	Front Black SL6R 2 Piece 13" - Slotted	$1,494.99
BKW-140-11918-D	Front Black SL6R 2 Piece 13" - Drilled & Slotted	$1,594.99
BKW-140-11918-DR	Front Red SL6R 2 Piece 13" - Drilled & Slotted	$1,594.99
BKW-140-11918-R	Front Red SL6R 2 Piece 13" - Slotted	$1,494.99
BKW-140-11919	Front Black SL6R 2 Piece 14" - Slotted	$1,619.99
BKW-140-11919-D	Front Black SL6R 2 Piece 14" - Drilled & Slotted	$1,719.99
BKW-140-11919-DR	Front Red SL6R 2 Piece 14" - Drilled & Slotted	$1,719.99
BKW-140-11919-R	Front Red SL6R 2 Piece 14" - Slotted	$1,619.99
BKW-140-11920	Rear Black SL4R 13" 2 Piece - Slotted	$1,494.99
BKW-140-11920-D	Rear Black SL4R 13" 2 Piece - Slotted & Drilled	$1,594.99
BKW-140-11920-DR	Rear Red SL4R 13" 2 Piece - Slotted & Drilled	$1,594.99
BKW-140-11920-R	Rear Red SL4R 13" 2 Piece - Slotted	$1,494.99

88-96 Wilwood Brake Kits

Prt No.	Description	Price
BKW-140-8337	Front Black SL6R Calipers 13" 2 Piece Rotors - Slotted	$1,494.99
BKW-140-8337-D	Front Black SL6R Calipers 13" 2 Piece Rotors - Drilled & Slotted	$1,594.99
BKW-140-8337-DR	Front Red SL6R Calipers 13" 2 Piece Rotors - Drilled & Slotted	$1,594.99
BKW-140-8337-R	Front Red SL6R Calipers 13" 2 Piece Rotors - Slotted	$1,494.99
BKW-140-9298	Front Black SL6R Caliper 14" 2 Piece Rotor - Slotted	$1,619.99
BKW-140-9298-D	Front Black SL6R Caliper 14" 2 Piece Rotor - Drilled & Slotted	$1,719.99
BKW-140-8314	Rear 12" 2 Piece Slotted Replacement Rotors w/Lines	$457.99
BKW-140-8314-D	Rear 12" 2 Piece Drilled & Slotted Replacement Rotors w/Lines	$559.99

97-2004 Wilwood Brake Kits

Prt No.	Description	Price
BKW-140-8031	Front Black SL6R Caliper 13" 2 Piece Rotor - Slotted	$1,494.99
BKW-140-8031-D	Front Black SL6R Caliper 13" 2 Piece Rotor - Slotted & Drilled	$1,594.99
BKW-140-8031-DR	Front Red SL6R Caliper 13" 2 Piece Rotor - Slotted & Drilled	$1,594.99
BKW-140-8031-R	Front Red SL6R Caliper 13" 2 Piece Rotor - Slotted	$1,494.99
BKW-140-8230	Front Black SL6R Caliper 14" 2 Piece Rotor - Slotted	$1,619.99
BKW-140-8230-D	Front Black SL6R Caliper 14" 2 Piece Rotor - Slotted & Drilled	$1,719.99
BKW-140-8230-DR	Front Red SL6R Caliper 14" 2 Piece Rotor - Slotted & Drilled	$1,719.99
BKW-140-8230-R	Front Red SL6R Caliper 14" 2 Piece Rotor - Slotted	$1,619.99
BKW-140-8032	Rear Black SL4R Caliper 13"Piece Rotor - Slotted	$1,494.99
BKW-140-8032-D	Rear Black SL4R Caliper 13"Piece Rotor - Slotted & Drilled	$1,594.99
BKW-140-8032-DR	Rear Red SL4R Caliper 13"Piece Rotor - Slotted & Drilled	$1,594.99
BKW-140-8032-R	Rear Red SL4R Caliper 13"Piece Rotor - Slotted	$1,494.99
BKW-140-9119	Rear Black SL4R Caliper 14" 2 Piece Rotor - Slotted	$1,619.99
BKW-140-9119-D	Rear Black SL4R Caliper 14" 2 Piece Rotor - Drilled & Slotted	$1,719.99
BKW-140-9119-DR	Rear Red SL4R Caliper 14" 2 Piece Rotor - Drilled & Slotted	$1,719.99
BKW-140-9119-R	Rear Red SL4R Caliper 14" 2 Piece Rotor - Slotted	$1,619.99

05-Present Wilwood Brake Kits

Prt No.	Description	Price
BKW-140-8921	Front Black SL6R Caliper 13" 2 Piece Rotor - Slotted	$1,494.99
BKW-140-8921-D	Front Black SL6R Caliper 13" 2 Piece Rotor - Drilled & Slotted	$1,594.99
BKW-140-8921-DR	Front Red SL6R Caliper 13" 2 Piece Rotor - Drilled & Slotted	$1,594.99
BKW-140-8921-R	Front Red SL6R Caliper 13" 2 Piece Rotor - Slotted	$1,494.99
BKW-140-8922	Front Black SL6R Caliper 14" 2 Piece Rotor - Slotted	$1,619.99
BKW-140-8922-D	Front Black SL6R Caliper 14" 2 Piece Rotor - Drilled & Slotted	$1,719.99
BKW-140-8922-DR	Front Red SL6R Caliper 14" 2 Piece Rotor - Drilled & Slotted	$1,719.99
BKW-140-8922-R	Front Red SL6R Caliper 14" 2 Piece Rotor - Slotted	$1,619.99
BKW-140-8032	Rear Black SL4R Caliper 13"Piece Rotor - Slotted	$1,494.99
BKW-140-8032-D	Rear Black SL4R Caliper 13"Piece Rotor - Slotted & Drilled	$1,594.99
BKW-140-8032-DR	Rear Red SL4R Caliper 13"Piece Rotor - Slotted & Drilled	$1,594.99
BKW-140-8032-R	Rear Red SL4R Caliper 13"Piece Rotor - Slotted	$1,494.99
BKW-140-9119	Rear Black SL4R Caliper 14" 2 Piece Rotor - Slotted	$1,619.99
BKW-140-9119-D	Rear Black SL4R Caliper 14" 2 Piece Rotor - Drilled & Slotted	$1,719.99
BKW-140-9119-DR	Rear Red SL4R Caliper 14" 2 Piece Rotor - Drilled & Slotted	$1,719.99
BKW-140-9119-R	Rear Red SL4R Caliper 14" 2 Piece Rotor - Slotted	$1,619.99

Wilwood SS Line Kits for Wilwood Calipers

Prt No.	Description	Price
BKW-220-10631	65-82 Front S/S Flex Line Kit (pair)	$64.99
BKW-220-10632	65-82 Rear S/S Flex Line Kit (pair)	$64.99
BKW-220-8338	88-96 Front S/S Flex Line Kit (pair)	$64.99
BKW-220-8517	88-96 Rear S/S Flex Line Kit - OE Calipers (pair)	$74.99
BKW-220-8176	97-04 Front S/S Flex Line Kit (pair)	$64.99
BKW-220-8177	97-04 Rear S/S Flex Line Kit (pair)	$74.99
BKW-220-9100	05-13 Front S/S Flex Line Kit (pair)	$64.99
BKW-220-9101	05-13 Rear S/S Flex Line Kit (pair)	$64.99

Lines must be purchased in addition to the brake kits except for the 1965-1982 D8 caliper kits.

Thermlock® Pistons:

Wilwood's exclusive Thermlock® Pistons provide the most effective thermal barrier available for minimizing heat transfer from the brake pads to the caliper body, seals, and fluid. This innovative multi-part design incorporates a stainless steel shield and coated aluminum shell configuration that effectively retards heat transfer by 25% and more. Lower operating temperatures translate to the elimination of seal crystallization, the elimination of localized fluid boiling, and longer service life through decreased distortion in the caliper body and piston bores.

Call for Pricing to Add Thermlock Pistons

BRAKE PADS
65 - present

Choosing Pads: Hawk Brake pads are top quality pads that will help peek your brakes performance. Certain pads will help you in different applications so be sure you read this fully.

Hawk HPS Pads
-Excellent Drag Racing Pad
-Low Dust
-High Friction
-Rotor Friendly

Hawk Blue 9012 Racing Pads
-Long Pad Life
-Good club racing pad
-Rotor Friendly
-Popular SCCA Pad

Hawk HP Plus Performance Pads
-Good for autocrossing and help improve track-time
-High resistance brake fade and great initial bite

Hawk DTC-70 Racing Pads
-Extremely High Brake Torque
-Aggresive Initial Bite
-Superior release characteristics
-For cars with high deceleration rates

97-13 Base Model Brake Pads

Prt No.	Year	Description	Price
HB247E.575	97-13	Hawk Blue 9012 Racing Brake Pads - Front	$199.99
HB247F.575	97-13	Hawk HPS Brake Pads - Front	$108.99
HB247N.575	97-13	Hawk HP Plus Brake Pads - Front	$139.99
HB247U.575	97-13	Hawk DTC70 Extreme Race Brake Pads - Front	$312.99
HB247Z.575	97-13	Hawk Ceramic Brake Pads - Front	$115.99
HB248E.650	97-13	Hawk Blue 9012 Racing Brake Pads - Rear	$170.99
HB248F.650	97-13	Hawk HPS Brake Pads - Rear	$79.99
HB248G.650	97-13	Hawk DTC60 Racing Brake Pads - Rear	$199.99
HB248N.650	97-13	Hawk HP Plus Brake Pads - Rear	$104.99
HB248Z.650	97-13	Hawk Ceramic Brake Pads - Rear	$80.99

65-82 Brake Pads

Prt No.	Year	Description	Price
HB126E.505	65-82	Hawk 9012 Blue Front/Rear Racing Pads	$153.99
HB126F.505	65-82	Hawk HPS Brake Pads - Front or Rear	$70.99
HB126N.505	65-82	Hawk HP Plus Brake Pads - Front or Rear	$83.99
HB126Z.505	65-82	Hawk Ceramic Brake Pads - Front or Rear	$81.99
HB128F.505	65-82	Hawk Dual Pin HPS Brake Pads	$114.99
HB128E.505	65-82	Hawk Dual Pin 9012 Blue Racing Pads	$227.99

06-13 Z06 & Grand Sport Brake Pads

Prt No.	Year	Description	Price
HB531N.570	06-13	Hawk HP Plus Brake Pads - Front (Pucks)	$233.99
HB531U.570	06-13	Hawk DTC-70 Brake Pads - Front (Pucks)	$341.99
HB531Z.570	06-13	Hawk Ceramic Brake Pads - Front (Pucks)	$193.99
HB532G.570	06-13	Hawk DTC60 Race Brake Pads - Rear (Pucks)	$304.99
HB532N.570	06-13	Hawk HP Plus Brake Pads - Rear (Pucks)	$116.99
HB532U.570	06-13	Hawk DTC70 Race Brake Pads - Rear (Pucks)	$316.99
HB532Z.570	06-13	Hawk Ceramic Disc Brake Pads - Rear (Pucks)	$96.99
HB658F.570	06-13	Hawk HPS Brake Pads - Front (1 Piece Pads)	$198.99
HB658N.570	06-13	Hawk HP Plus Brake PadsFront (1 Piece Pads)	$247.99
HB658U.570	06-13	Hawk DTC 70 Brake Pads - Front (1 Piece Pads)	$334.99
HB658Z.570	06-13	Hawk Ceramic Brake Pads - Front (1 Piece Pads)	$205.99
HB659F.570	06-13	Hawk HPS Brake Pads - Rear (1 Piece Pads)	$159.99
HB659G.570	06-13	Hawk DTC60 Brake Pads - Rear (1 Piece Pads)	$294.99
HB659N.570	06-13	Hawk HP Plus Brake Pads - Rear (1 Piece Pads)	$199.99
HB659Z.570	06-13	Hawk Ceramic Brake Pads - Rear (1 Piece Pads)	$165.99
HB-ZO6-8469	06-13	C6 ZO6 Front Caliper Pin Set	$163.99
HB-ZO6-8470	06-13	C6 ZO6 Rear Caliper Pins	$122.99

84-96 Brake Pads

Prt No.	Year	Description	Price
HB173F.570	84-87	Hawk HPS Brake Pads - Front	$91.99
HB173N.570	84-87	Hawk HP Plus Brake Pads - Front	$118.99
HB111E.610	88-96	Hawk Blue Brake Pad - Front	$180.99
HB111F.610	88-96	Hawk HPS Brake Pads - Front	$106.99
HB111N.610	88-96	Hawk HP Plus Brake Pads - Front	$148.99
HB111Z.610	84-96	Hawk Ceramic Brake Pads - Front	$114.99
HB112E.540	84-96	Hawk Blue 9012 - Rear	$137.99
HB112F.540	84-96	Hawk HPS Brake Pads - Rear	$67.99
HB112N.540	84-96	84-96 Hawk HP Plus Brake Pads - Rear	$108.99
HB112Z.540	88-96	84-96 Hawk Ceramic Brake Pads - Rear	$74.99

14+ Brake Pads

Prt No.	Year	Description	Price
HB7265Z.582	14+	Hawk Front Ceramic Pads	$249.99
HB727Z.592	14+	Hawk Rear Ceramic Pads	$94.99

Rubber Hose Kits:
For OE look and performance.
Great for normal everyday driving.

Stainless Steel Hose Kits (s.s.):
For more confidence braking by delivering a faster response time and a firmer pedal.

54-82 brake lines

Prt No.	Year	Description	Price
BLS-03	54	Complete Brake Line Set	$149.99
BLS-04	55	Complete Brake LIne Set	$149.99
BLS-05	56-62	Complete Brake Line Set	$129.99
BLS-06	63-64	Complete Brake Line Set - Non Power	$119.99
BLS-07	63-64	Complete Brake Line Set - Power	$119.99
BLS-08	65	Early 65 - Complete Brake Line Set - Non Power 3/16" Dia.	$119.99
BLS-09	65	Mid to Late 65 - Complete Brake Line Set - Non Power 1/4" Dia.	$119.99
BLS-10	65	Early 65 - Complete Brake Line Set - Power 3/16" Dia.	$129.99
BLS-11	65	Mid to Late 65 - Complete Brake Line Set - Power 1/4" Dia.	$129.99
BLS-12	66	Complete Brake Line Set - Non Power	$129.99
BLS-13	66	Complete Brake Line Set - Power	$129.99
BLS-14	67	Complete Brake Line Set - Non Power	$139.99
BLS-15	67	Complete Brake Line Set - Power	$139.99
BLS-16	68	Complete Brake Line Set - Non Power	$139.99
BLS-17	68	Complete Brake Line Set - Power	$139.99
BLS-18	69	Complete Brake Line Set - Non Power	$139.99
BLS-19	69	Complete Brake Line Set - Power	$139.99
BLS-20	70-73	Complete Brake Line Set - Non Power	$149.99
BLS-21	70-73	Complete Brake Line Set - Power	$149.99
BLS-22	74	Complete Brake Line Set - Non Power	$169.99
BLS-23	74	Complete Brake Line Set - Power	$169.99
BLS-24	75	Complete Brake Line Set - Non Power	$169.99
BLS-25	75-82	Complete Brake Line Set - Power	$169.99

ADD "S" to part number for Stainless Steel Lines - plus $30-60

58-82 brake & fuel line clip kit

Prt No.	Year	Description	Price
CL1	58-62	Brake & Fuel Line Clip Set	$27.99
CL2	63-65	Brake & Fuel Line Clip Set	$29.99
CL3	65L-66	Brake & Fuel Line Clip Set w/1/4" Front to Rear Brake Line	$18.99
CL4	67	Brake & Fuel Line Clip Set	$15.99
CL5B	68	Brake & Fuel Line Clip Set - Big Block	$25.99
CL5S	68	Brake & Fuel Line Clip Set - Small Block	$25.99
CL6B	69-70	Brake & Fuel Line Clip Set - Big Block	$24.99
CL6S	69-70	Brake & Fuel Line Clip Set - Small Block	$24.99
CL7B	70-73	Brake & Fuel Line Clip Set - Base Engines	$24.99
CL7S	70-72	Brake & Fuel Line Clip Set	$24.99
CL8	74-82	Brake & Fuel Line Clip Set	$27.99
BLS-BoltKit	58-82	Brake Line Bolt Kit - 14 Pieces	$16.99

53-82 brake blocks

Prt No.	Year	Description	Price
BLB-01C	53-62	Master Cylinder Brake Block Kit w/Bolt & Washers	$41.99
BLB-05	56-62	Left Front Brake LIne Block	$24.99
BLB-06	56-62	Right Front Brake Block	$24.99
BLB-07	53-62	Rear Brake Block on Axle	$24.99
BLB-8	63-64	Left Front Brake Block - Pwr/Non-Pwr	$24.99
BLB-9	65	Left Front Brake Block - Pwr 3/16	$24.99
BLB-10	65	Non-Pwr - Left Front Brake Block	$24.99
BLB-11	65-66	Left Front Block, Non-Pwr 1/4"	$24.99
BLB-12	66	Left Front Brake Block - Non-Pwr	$24.99
BLB-13	67-68	Left Front Brake Block - Pwr/Non-Pwr	$24.99
BLB-14	63-64	Left Rear Brake Block - Pwr/Non-Pwr	$24.99
BLB-15	65	Left Rear Brake Block - Pwr 3/16"	$24.99
BLB-16	65	Left Rear Brake Block - Non-Pwr	$24.99
BLB-17	65	Left Rear Brake Block - Pwr 1/4"	$19.99
BLB-18	66-82	Left Rear Brake Block	$19.99
BLB-19	63-82	Right Rear Brake Block	$19.99

63-82 tank to pump fuel lines

Prt No.	Year	Description	Price
F-8	63-67	Small Block Fuel Line - Tank to Pump	$69.99
F-9	63-67	Big Block Fuel Line - Tank to Pump	$69.99
F-10	68	Main Fuel LIne - Steel	$74.99
F-11	68	Right Side Fuel Return Line - Steel	$74.99
F-12	69	Right Side Main Fuel Line Kit - Steel	$74.99
F-13	69-74	Right Side Fuel Return - 1/4" - Steel	$74.99
F-13A	75-77	Right Side Fuel Return - 1/4" - Steel	$74.99
F-14	70-74	Right Side Main Fuel Line - Steel	$69.99
F-14A	75-77	Main Right Side Fuel Line - Steel	$69.99
F-15	70-74	Left Side Vapor Return - Steel	$69.99
F-15A	75-77	Left Side Vapor Return - Steel	$69.99
F-16	78-82	Right Side Main Fuel Line - Steel	$79.99
F-17	78-82	Right Side Return Fuel Line - Steel	$69.99
F-18	78-82	Left Side Vapor Return - Steel	$79.99

ADD "S" to part number for Stainless Steel Lines - plus $25-30

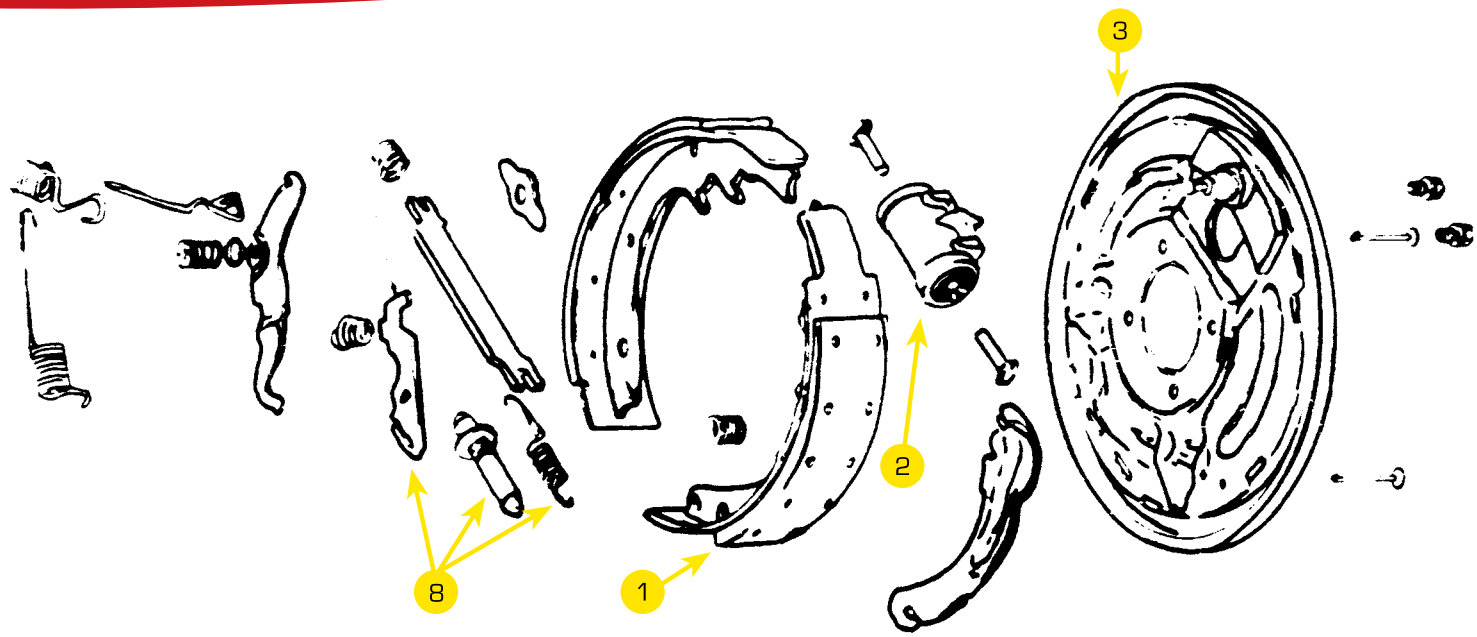

1963-64 drum brakes

Prt No.	Ilus No.	No. Car	Year	Description	Price
DB-01	–	2	63-64	Front Drum	$59.99
DB-02	–	2	63-64	Rear Drum	$39.99
DB-03	1	1	63-64	Front Shoes	$39.99
DB-04	1	1	63-64	Shoes - Rear	$39.99
DB-05L	2	1	63-64	Left Front Wheel Cylinder	$39.99
DB-05R	2	1	63-64	Right Front Wheel Cylinder	$39.99
DB-06L	2	1	63-64	Left Rear Wheel Cylinder	$19.99
DB-06R	2	1	63-64	Right Rear Wheel Cylinder	$19.99
DB-07	3	1	63-64	Left Front Backing Plate - Used	$74.99
DB-08	3	1	63-64	Right Front Backing Plate - Used	$74.99
DB-09	3	1	63-64	Left Rear Backing Plate - Used	$74.99
DB-10	3	1	63-64	Right Rear Backing Plate - Used	$74.99
DB-15	–	1	63-64	Drum Brake Hardware Kit – Car Set	$94.99
DB-29	–	1	63-64	Left Rear Hard Line – Steel	$12.99
DB-30	–	1	63-64	Left Rear Hard Line – SS	$15.99
DB-31	–	1	63-64	Right Rear Hard Line – Steel	$12.99
DB-32	–	1	63-64	Right Rear Hard Line – SS	$15.99
FB-03	–	2	63-64	Front Flex Line - Rubber	$12.99
RB-12	–	1	63-64	Rear Flex Line – Rubber	$17.99
BLK-01	–	1	63-64	Front & Rear Flex Lines – Rubber	$41.99
RB-13	–	1	63-64	SS Flex Lines	$84.99

DB-103

DB-104

DB-01

FB-123

DB-06

DB-05

FB-03

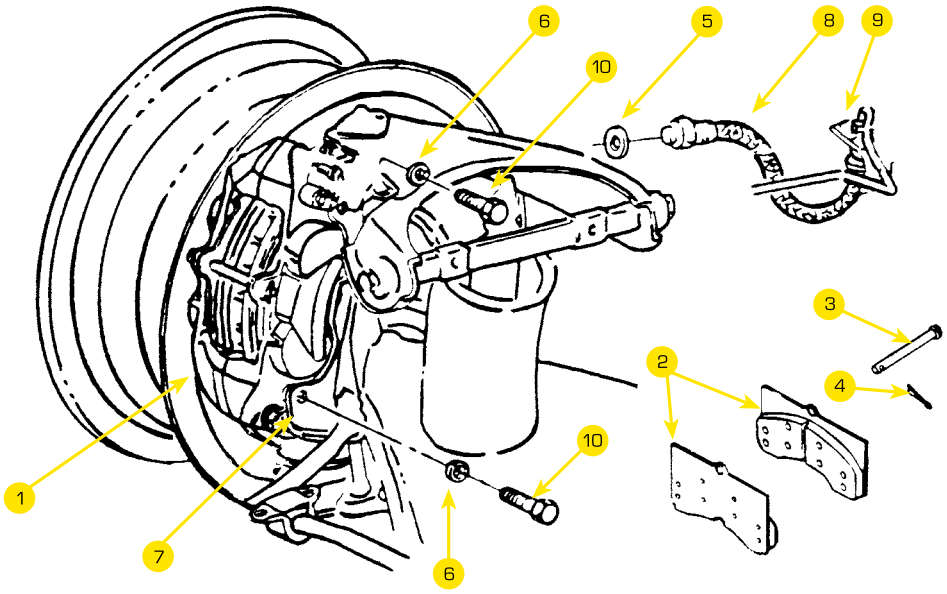

FB-02
O-ring caliper

RB-04

FB-09

FB-11

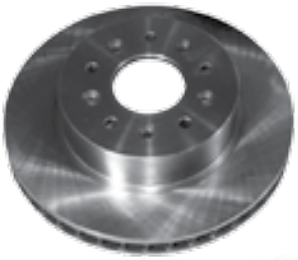

FB-16

FB-16S

RB-32

1963-82 front brakes

Prt No.	Ilus No.	No. Car	Year	Description	Price
FB-01	1	1	65-82	Left Front Caliper – Reman – O-Ring SS Sleeved	$112.99
FB-01N	1	1	65-82	Left Front Caliper – New – O-Ring SS Sleeved	$179.99
FB-02	1	1	65-82	Right Front Caliper – Reman – O-Ring SS Sleeved	$112.99
FB-02N	1	1	65-82	Right Front Caliper – New – O-Ring SS Sleeved	$179.99
FB-03	2	8	65-82	Front Brake Hose	$13.99
FB-04	2	8	65-82	Front Brake Hose Brass Gasket	$0.99
RB-04	3	4	65-82	Front/Rear Semi-Metallic Brake Pads	$24.99
RB-06	3	4	65-82	Front Rear Caliper Pin & Cotter Pin (ea)	$1.99
RB-07	3	4	65-82	Front Rear Caliper Pin & Cotter Pin (Car Set)	$6.99
FB-08C	-	1	65-82	Right Front Backing Plate – Correct	$47.99
FB-08G	-	1	75-82	Right Front Backing Plate – Gold	$30.99
FB-08S	-	1	65-74	Right Front Backing Plate – Silver	$30.99
FB-09C	-	1	65-82	Left Front Backing Plate – Correct	$47.99
FB-09G	-	1	75-82	Left Front Backing Plate – Gold	$30.99
FB-09S	-	1	65-74	Left Front Backing Plate – Silver	$30.99
FB-11	-	1	65-82	Felt Gasket (pr)	$7.99
FB-12E	-	2	65-68	Left Front Caliper Mounting Bracket	$49.99
FB-12L	-	2	69-82	Left Front Caliper Mounting Bracket	$49.99
FB-13E	-	2	65-68	Right Front Caliper Mounting Bracket	$29.99
FB-13L	-	2	69-82	Right Front Caliper Mounting Bracket	$49.99
FB-16	-	2	65-82	OE Replacement Front Rotor	$29.99
FB-16SL	-	1	65-82	Left Front Slotted & Dimpled Rotor	$122.99
FB-16SR	-	1	65-82	Right Front Slotted & Dimpled Rotor	$122.99
RB-13	-	2	65-82	SS Flex Lines – Car Set	$84.99
RB-31	-	2	65-82	Caliper Mounting Bolt	$1.99
RB-32	-	2	65-82	Speed Bleeder (2pck)	$16.99

FB-125N

1965-82 front brakes

Prt No.	Ilus No.	No. Car	Year	Description	Price
RB-14	9	2	63-82	Horse Shoe Clip	$0.99
RB-31	10	4	65-82	Caliper Bolt w/Lock Washer	$1.99
FB-125N	–	1	67-76	Master Cylinder – Power	$109.99
FB-125NP	–	1	67-76	Master Cylinder – Non Power	$109.99
FB-126	–	1	77-82	Master Cylinder – Power	$109.99

BKW-260-8556-P

1965-82 Wilwood

Prt No.	Ilus No.	No. Car	Year	Description	Price
BKW-260-8555	–	1	65-82	Aluminum Master Cylinder 1" Bore – Raw	$199.99
BKW-260-8555-BK	–	1	65-82	Aluminum Master Cylinder 1" Bore – Black	$249.99
BKW-260-8555-P	–	1	65-82	Aluminum Master Cylinder 1" Bore – Polished	$249.99
BKW-260-8556	–	1	65-82	Aluminum Master Cylinder 1.125" Bore – Raw	$199.99
BKW-260-8556-BK	–	1	65-82	Aluminum Master Cylinder 1.125" Bore – Black	$249.99
BKW-260-8556-P	–	1	65-82	Aluminum Master Cylinder 1.125" Bore – Polished	$249.99

VS-22501

1984-96 front brakes

Prt No.	Ilus No.	No. Car	Year	Description	Price
BRF-8487	–	2	84-87	Front Rotor	$59.99
BRF-8894-12	–	2	88-94	12" Front Rotor	$49.99
BRF-8896-13-L	–	1	88-96	13" LH Front Rotor	$79.99
BRF-8896-13-R	–	1	88-96	13" RH Front Rotor	$79.99
FB-245	–	1	84-87	Left Front Caliper – Reman	$59.99
FB-246	–	1	84-87	Right Front Caliper – Reman	$59.99
FB-249	–	1	88-96	LF Brake Caliper - Big Brake – Reman	$59.99
FB-250	–	1	88-96	RF Brake Caliper - Big Brake – Reman	$59.99
FB-251	–	1	88-96	LF Brake Caliper - Reman	$59.99
FB-252	–	1	88-96	RF Brake Caliper - Reman	$59.99
FB-265	–	2	84-87	Front Brake Hose	$15.99
FB-266L	–	1	88-92	Left Front Rubber Brake Hose	$21.99
FB-266R	–	1	88-92	Right Front Rubber Brake Hose	$21.99
FB-267	–	2	93	Front Brake Hose	$19.99
FB-268L	–	1	94-96	Left Front Rubber Brake Hose	$29.99
FB-268R	–	1	94-96	Right Front Rubber Brake Hose	$29.99
FB-269	–	2	84-96	Copper Washer	$1.99
VS-22500	–	1	85-87	C4 to C5 Front Brake Kit	$999.99
VS-22501	–	1	88-96	C4 to C5 Front Brake Kit	$1019.99
FB-304K	–	1	85-87	Front Caliper Bracket for C6Z06 Calipers	$184.99
FB-305K	–	1	88-96	Front Caliper Adapter Bracket Kit for C6 Z06 Calipers	$199.99
FB-306K	–	1	88-96	Front Caliper Adapter Bracket Kit for C5 Calipers	$189.99

FB-306

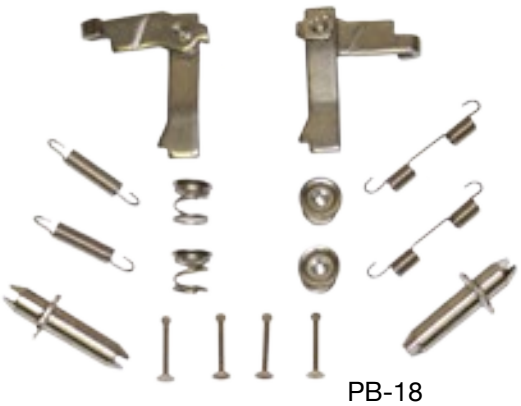

PB-18

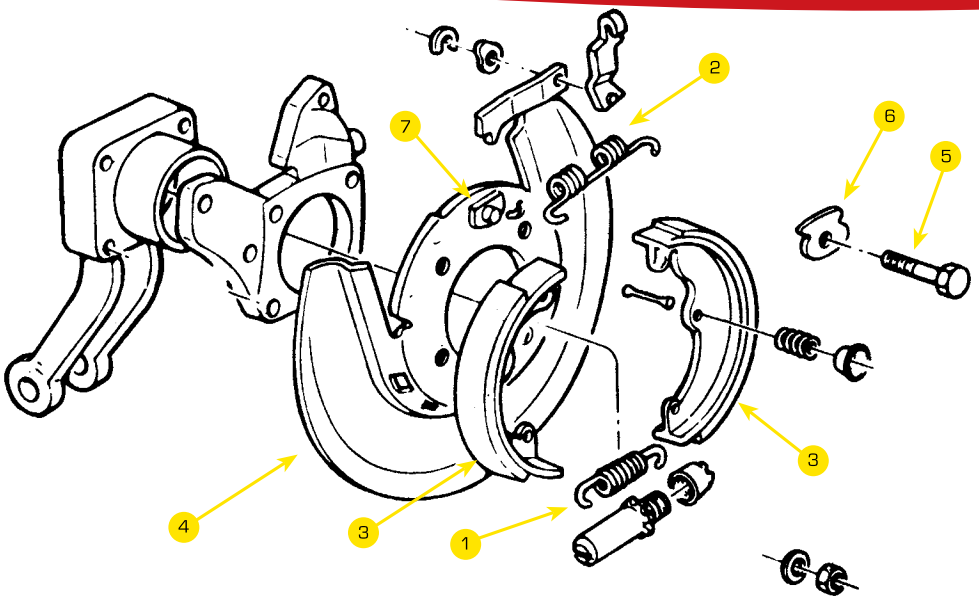

PB-19

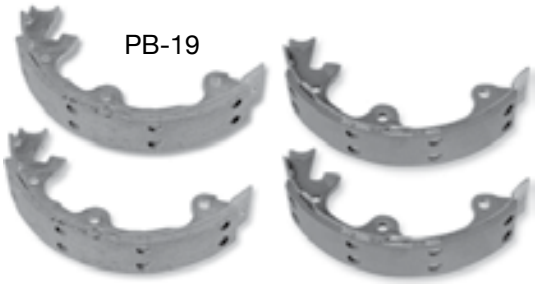

BA-13
left

BA-14
right

1965-82 parking brakes

Prt No.	Ilus No.	No. Car	Year	Description	Price
BA-13C	*4*	*1*	*65-82*	*Left Rear Backing Plate – Correct*	***$47.99***
BA-13G	*4*	*1*	*75-82*	*Left Rear Backing Plate – Gold*	***$30.99***
BA-13S	*4*	*1*	*65-74*	*Left Rear Backing Plate – Silver*	***$30.99***
BA-14C	*4*	*1*	*65-82*	*Right Rear Backing Plate – Correct*	***$47.99***
BA-14G	*4*	*1*	*75-82*	*Right Rear Backing Plate – Gold*	***$30.99***
BA-14S	*4*	*1*	*65-74*	*Right Rear Backing Plate – Silver*	***$30.99***
BA-15	*5*	*2*	*65-82*	*Parking Brake Anchor Bolt*	***$1.99***
BA-16	*6*	*2*	*65-82*	*Parking Brake Anchor Guide Plate*	***$3.99***
BA-42	*7*	*2*	*65-82*	*Parking Brake Anchor*	***$14.99***
PB-18	*–*	*1*	*65-82*	*SS Parking Brake Hardware Kit*	***$59.99***
PB-19	*3*	*4*	*65-82*	*Parking Brake Shoes – Set of 4*	***$45.99***

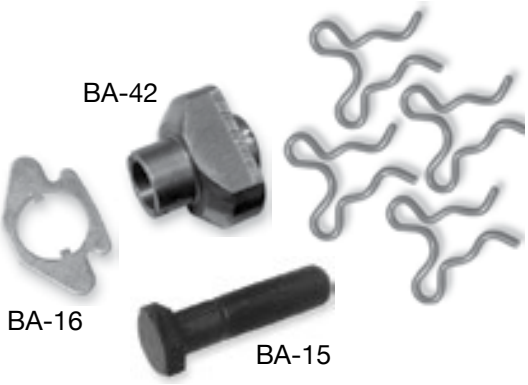

BA-42

BA-16

BA-15

1963-82 Parking Brake Cables

Prt No.	Ilus No.	No. Car	Year	Description	Price
PB-24	*–*	*1*	*67-82*	*S.S Front Parking Brake Cable w/Pulley, Bolt & Spacer*	***$49.99***
PB-26	*–*	*1*	*64-65*	*Right Rear Parking Brake Cable*	***$49.99***
PB-26E	*–*	*1*	*63*	*Right Rear Parking Brake Cable*	***$59.99***
PB-27	*–*	*1*	*64-65*	*Left Rear Parking Brake Cable*	***$49.99***
PB-27E	*–*	*1*	*63*	*Left Rear Parking Brake Cable*	***$49.99***
PB-29	*–*	*1*	*65-82*	*Rear Parking Brake Cable – Correct*	***$54.99***
PB-30	*–*	*1*	*65-82*	*Rear SS Parking Brake Cable*	***$46.99***
PB-31	*–*	*2*	*65-82*	*Mickey Mouse Clip*	***$0.99***
PB-32	*–*	*2*	*65-82*	*SS Mickey Mouse Clips (4 Pcs)*	***$2.99***
PB-34	*–*	*1*	*67-82*	*Front Pulley Cable*	***$17.99***
PB-36	*–*	*–*	*65-82*	*Parking Brake Install Tool*	***$7.99***
TA-09	*–*	*–*	*65-82*	*Parking Brake Cable Guide*	***$1.99***

REAR BRAKES
65-96

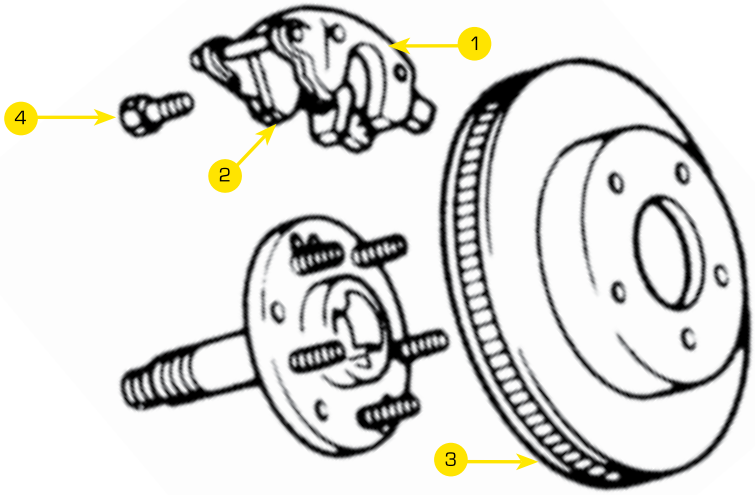

1965-82 rear brakes

Prt No.	Ilus No.	No. Car	Year	Description	Price
RB-01	1	1	65-82	Left Front Caliper – Reman – O-Ring SS Sleeved	$112.99
RB-01N	1	1	65-82	Left Front Caliper – New – O-Ring SS Sleeved	$179.99
RB-02	1	1	65-82	Right Front Caliper – Reman – O-Ring SS Sleeved	$112.99
RB-02N	1	1	65-82	Right Front Caliper – New – O-Ring SS Sleeved	$179.99
RB-04	2	8	65-82	Front/Rear Semi-Metallic Brake Pads	$24.99
RB-06	–	4	65-82	Front/Rear Caliper Pin & Cotter Pin	$1.99
RB-07	–	4	65-82	Front Rear Caliper Pin & Cotter Pin (Car Set)	$6.99
RB-10	–	1	65-82	Left Rear Caliper Hard Line	$20.99
RB-11	–	1	65-82	Right Rear Caliper Hard Line	$20.99
RB-12	–	2	65-82	Rear Rubber Flex Line	$18.99
RB-13	–	4	65-82	SS Flex Lines – Car Set	$84.99
RB-13-OE	–	1	65-82	Single Rear SS Flex Line Kit for Stock Calipers	$99.99
RB-13-WWE	–	1	65-82	Single Rear SS Flex Line Kit for Wilwood Calipers	$99.99
RB-14	–	2	63-82	Brake Line Horse Shoe Clip	$0.99
RB-16	3	2	65-82	Rear Rotor	$49.99
RB-16SL	3	1	65-82	LH Rear Slotted & Dimpled Rotor	$122.99
RB-16SR	3	1	65-82	RH Rear Slotted & Dimpled Rotor	$122.99
RB-31	4	4	65-82	Caliper Mounting Bolt	$1.99
RB-32	–	–	65-82	Speed Bleeders - 2 pack (SS)	$17.99
RB-34	–	–	–	Dot 3 Brake Fluid – 1 Qt. Bottle	$6.99
RB-37	–	–	–	Wilwood EXP 600 Plus Racing Brake Fluid 16.9 oz Bottle	$20.99
RB-38	–	–	–	Wilwood DOT 4 570 High Temp Brake Fluid 12 oz Bottle	$12.99
RB-39	–	–	–	Wilwood DOT 5 Silicone Brake Fluid 12 oz Bottle	$14.99

RB-02

RB-09

RB-16

RB-04

RB-31

RB-12

RB-32

RB-34

RB-35

RB-212

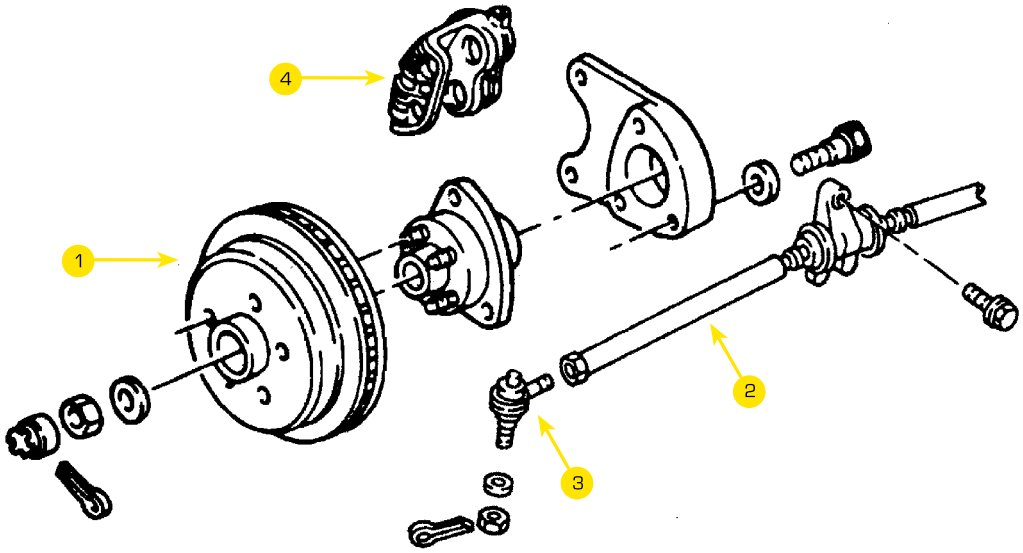

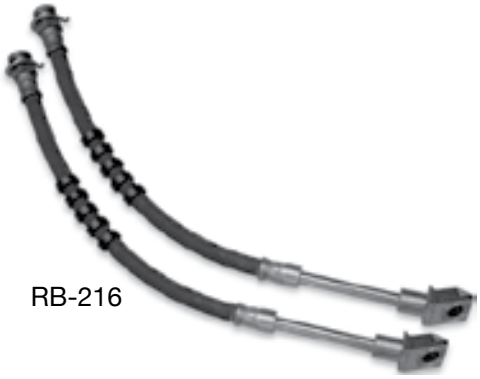

RB-216

1984-96 rear brakes

Prt No.	Ilus No.	No. Car	Year	Description	Price
BRR-8487	-	*2*	*84-87*	*Rear Rotor*	***$59.99***
BRR-8487-DS	-	*1*	*84-87*	*Rear Drilled & Slotted Rotors (pair)*	***$204.99***
BRR-8896	-	*2*	*88-96*	*Rear Rotor*	***$69.99***
BRR-8896-DS	-	*1*	*88-96*	*Rear Drilled & Slotted Rotors (pair)*	***$174.99***
RB-206	*2*	*1*	*84-96*	*Rear Toe Link Assembly*	***$489.99***
RB-207HD	*2*	*1*	*84-96*	*HD Rear Toe Link Assembly w/Heims*	***$369.99***
RB-208	*3*	*2*	*84-91*	*Rear Outer Tie Rod End*	***$49.99***
RB-209	*3*	*2*	*92-96*	*Rear Outer Tie Rod Ends*	***$32.99***
RB-36	–	*2*	*84-96*	*Speed Bleeders (2 Pack)*	***$17.99***
RB-216	–	*2*	*84-87*	*Rear Rubber Brake Hose*	***$26.99***
RB-217	–	*1*	*88-92*	*Left Rear Rubber Brake Hose*	***$26.99***
RB-218	–	*1*	*88-92*	*Right Rear Rubber Brake Hose*	***$26.99***
RB-219	–	*2*	*93-96*	*Rear Rubber Brake Hose*	***$26.99***
RB-224	–	*4*	*84-87*	*Semi-Metallic Brake Pads*	***$49.99***
RB-225	–	*4*	*88-96*	*Semi-Metallic Brake Pads*	***$39.99***
RB-226	–	*1*	*84-87*	*Left Rear Caliper – Reman*	***$59.99***
RB-227	–	*1*	*84-87*	*Right Rear Caliper – Reman*	***$59.99***
RB-228	–	*1*	*88-96*	*Left Rear Caliper – Reman*	***$89.99***
RB-229	–	*1*	*88-96*	*Right Rear Caliper – Reman*	***$89.99***

RB-224

RB-201

BCK-01

1965-82 OE Brake Caliper Kits

- SS Sleeved Calipers - W/O-ring Pistons
- Pads
- Flex Lines
- Pins
- Fluid
- *Specify Year & Power or Non-Power Brakes*

Prt No.	Year	Description	Price
BCK-01	*67-82*	*With Master Cylinder*	***$569.99***
BCK-01S	*67-82*	*With Master Cylinder, SS Flex Lines*	***$639.99***
BCK-01N	*67-82*	*With Master Cylinder, New Calipers*	***$899.99***
BCK-01NS	*67-82*	*With Master Cylinder, New Calipers, SS Flex Lines*	***$939.99***
BCK-02	*65-82*	*W/O Master Cylinder*	***$512.99***
BCK-02S	*65-82*	*W/O Master Cylinder, SS Flex Lines*	***$582.99***
BCK-02N	*65-82*	*W/O Master Cylinder, New Calipers*	***$842.99***
BCK-02NS	*65-82*	*W/O Master Cylinder , New Calipers, SS Flex Lines*	***$882.99***

1965-82 Calipers Only

BCK-03.....$419.99
Reman *+ $200 Core*
BCK-03N.....$725.99
NEW *No Core Charge*

1965-13 Rotor Packages

Prt No.	Year	Description	Price
BRK-01	*65-82*	*OE Rotors – Car Set*	***$194.99***
BRK-01S	*65-82*	*Slotted & Dimpled – Car Set*	***$459.99***
BRK-01SH	*65-82*	*Slotted & Dimpled w/Hawk HPS Pads*	***$592.99***
BRK-02	*65-82*	*OE Rotors w/Semi-Metallic Pads*	***$214.99***
BRK-03	*84-87*	*OE Replacement Rotors – Car Set*	***$203.99***
BRK-03S	*84-87*	*Slotted & Drilled – Car Set*	***$384.99***
BRK-03SH	*84-87*	*Slotted & Drilled w/Hawk HPS Pads*	***$519.99***
BRK-04-12	*88-94*	*12" OE Replacement Rotors – Car Set*	***$299.99***
BRK-04-13	*88-96*	*13" OE Replacement Rotors – Car Set*	***$299.99***
BRK-04S-12	*88-94*	*12" Drilled – Car Set*	***$399.99***
BRK-04S-13	*88-96*	*13" Drilled – Car Set*	***$419.99***
BRK-04SH-12	*88-94*	*12" Drilled w/Hawk HPS Pads*	***$519.99***
BRK-04SH-13	*88-96*	*13" Drilled w/Hawk HPS Pads*	***$539.99***
BRK-05	*97-04*	*OE Replacement Rotors*	***$249.99***
BRK-05S	*97-04*	*Slotted & Drilled – Car Set*	***$479.99***
BRK-05SH	*97-04*	*Slotted & Drilled w/Hawk HPS Pads*	***$649.99***
BRK-06	*05-13*	*GM OE Replacement Rotors – (JL9)*	***$299.99***
BRK-06AC	*05-13*	*AC Delco Durastop Rotors – (JL9)*	***$399.99***
BRK-07	*05-13*	*GM OE Replacement Rotors – Drilled – (J55)*	***$299.99***
BRK-07AC	*05-13*	*AC Delco Durastop Rotors Drilled – (J55)*	***$499.99***
BRK-08	*05-13*	*GM OE Replacement Rotors Drilled – (J56)*	***$449.99***
BRK-08AC	*05-13*	*AC Delco Durastop Rotors Drilled – (J56)*	***$499.99***

Stainless Steel Flex Line Kits

RB-13 .....65-82 ..... $84.99
SBH-8487.....84-87 ..... $119.99
SBH-8893.....88-93 ..... $119.99
SBH-9496.....94-96 ..... $119.99
SBH-9704.....97-4 ..... $129.99
SBH-05.....05-13 ..... $149.99
SBH-C6Z06.....06-13 ..... $149.99

BKW-140

C6 NOTES:
JL-9 – 12.8" Rotors - Base Cars
J55 – 13.4" Rotors – Z51 Suspension
J56 – 14" Rotors - Grand Sport & Z06
If you track your car w/Factory Style Rotors, use the part numbers ending in AC.

Ball Joint Tool

Separate ball joints quickly, easily and without thread damage with this heavy-duty ball joint tool. Made of drop forged steel with zinc plating for life-long use.

541.....$9.99

Tie Rod Joint Tool

Separating Tie Rod Ends from their attachment points with the correct tool makes for an easy, safe job that eliminates the possibility of ruining the end. Tie Rod End Puller is the correct tool to use. Made with a 21/32" jaw, forged from heat treated steel and then zinc plated for life-long use.

543.....$9.99

Tap & Die Suspension Set

Six hard-to-find re-threader taps and dies most needed in Corvette suspension work. Complete with diagrams and service tips for use on approximately 85% of front and rear suspensions.

TDS-01 .....$21.99

All 3 Tools: *SM-01, PB-36, TSD-01*
TOOL-3 .....$32.99

Shock Mount Remover

remover tool

SR-22K/SR-21K Shock Mount (see pg25)

Shock Mounts often rust solid inside the support and strut rod. Removal often ruins the shock mount. Our tool, complete with illustrated instructions and service tips, prevents damage to the shock mount and makes removal faster and easier.

SM-01..... $16.99

Needle Nose Pliers

Ideal for working in hard to reach places.
A lifesaver for t-arm bolt installation.

NN-01 ..... $8.99

Parking Brake Installation Tool

Our tool comes with completely illustrated instructions to make parking brake work easier and less frustrating.

PB-36 ..... $7.99

Suspension DVD

This video will show you how to remove and install the front and rear suspension on a 63-82 Corvette.

DVD-01 .....$24.99

Car Dollies

Make it easier to move your project around your shop. Keep those custom wheels clear of the work zone and still be able to move your Corvette.

Prt No.	Description	Price
VSA-M998071	Dolly Dock	**$39.99**
VSA-M998074	5 Hole Roll Around Autodolly(pr)	**$117.99**
VSA-M998101	12" x 16" Autodolly(pr)	**$89.99**

1963-82 ALIGNMENT SPECIFICATIONS

1963-82

Street Specs

FRONT

Rake	.500” positive
Toe	1/32” Total Toe In
Camber	0 Degrees
Caster OE Upper Arms	Max Degree Positive
Caster w/VS Tubular Uppers	6-8 Degrees Positive

REAR

Toe	1/8” Total Toe In
Camber	.25 Degrees negative

Track Specs

FRONT

Rake	.200” positive
Toe	0 - .0625” Total Toe Out
Camber	3/4 – 2 Degree Negative
Caster w OE Upper Arms	Max Possible
Caster w/VS Tubular Uppers	6.3-7.5 Degrees Positive

REAR

Toe	1/8 to 5/16” Total Toe In
Camber	.5 – 1 Degree Negative

Advanced Street Specs

FRONT

Rake	.500” positive
Toe	0 - Total
Camber	1/4-1/2 Degree Negative
Caster w/OE Upper Arms	Max Possible
Caster w/VS Tubular Uppers	6-8 Degrees Positive

REAR

Toe	1/8” Total Toe In
Camber	.25-.50 Degree Negative

*All toe amounts are total toe measurements. *You may experience accelerated tire wear with these alignment settings.*

1984-96 ALIGNMENT SPECIFICATIONS

Street Specs

FRONT

Rake	.500” positive
Toe	.0312” Total Toe In
Camber	0 Degrees
Caster	6.25-8 Degrees Positive

REAR

Toe	125” Total Toe In
Camber	.25 Degrees negative

Track Specs

FRONT

Rake	.180” positive
Toe	0 - .0625” Total Toe Out
Camber	.5 – 2.0 Degrees Negative
Caster	6.3-7.5 Degrees Positive

REAR

Toe	.125 to .3125” Total Toe In
Camber	.500 – 1.00” Degrees Negative

Advanced Street Specs

FRONT

Rake	.250” positive
Toe	0 - Total
Camber	.25-.5 Degrees Negative
Caster	6.25-8 Degrees Positive

REAR

Toe	.125” Total Toe In
Camber	.25 – .5 Degrees Negative

1997-13 ALIGNMENT SPECIFICATIONS

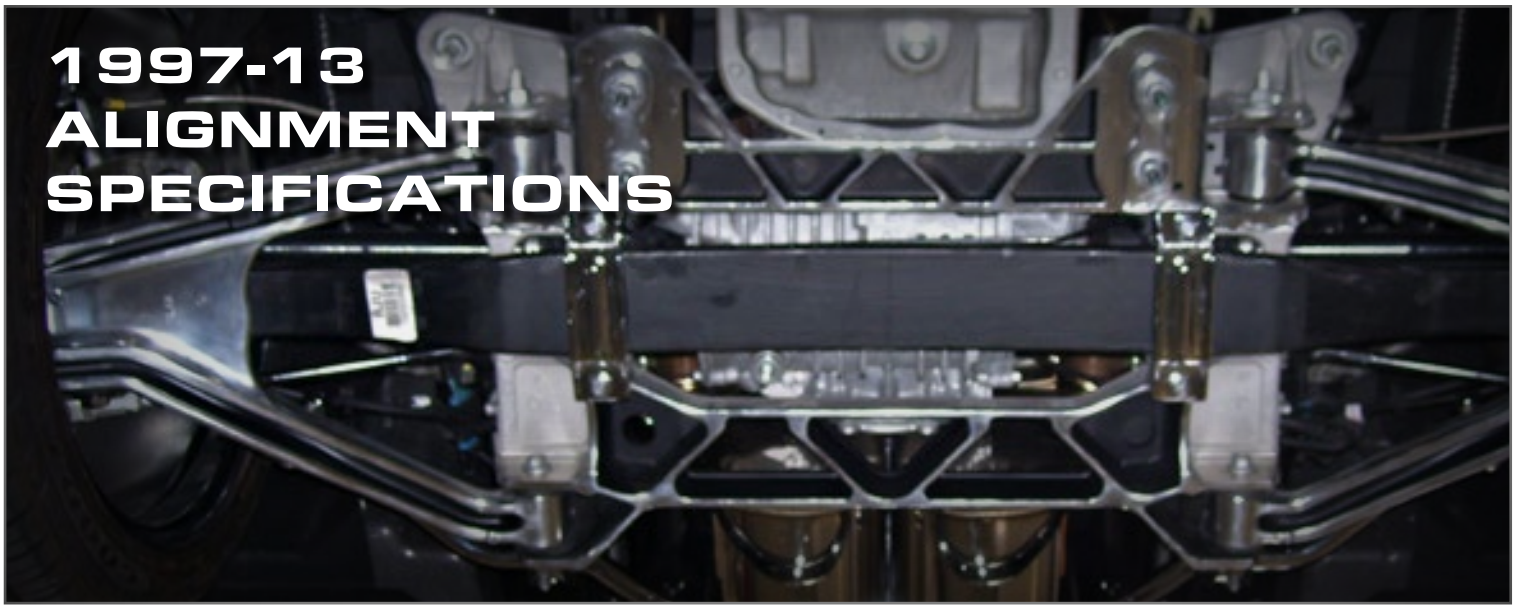

Street Specs

FRONT

Rake	20mm positive
Toe	.0312” Total Toe In
Camber	0-.250 Degrees negative
Caster	7.00-8.5 Degrees Positive

REAR

Toe	.125” Total Toe In
Camber	.25 Degrees negative

Track Specs

FRONT

Rake	0 to 10mm positive
Toe	0 - .0625” Total Toe Out
Camber	1.5 – 2.5 Degrees Negative
Caster	6.3-7.5 Degrees Positive

REAR

Toe	.125 to .3125” Total Toe In
Camber	.500 – 1.00” Degrees Negative

Advanced Street Specs

FRONT

Rake	10mm positive
Toe	0 - Total
Camber	.50-1.25 Degrees Negative
Caster	6.25-8 Degrees Positive

REAR

Toe	.125” Total Toe In
Camber	.25 – .5 Degrees Negative

Drag Race

FRONT

Rake	10mm negative
Toe	0 Total
Camber	0 to .2 Degrees positive
Caster	7.5-8.5 Degrees positive

REAR

Toe	.01-.03” Total Toe In
Camber	0 to .10 Degrees Negative

These specifications are starting point for base line packages. Rubber bushings can effect final numbers. For pure track time cars please call for specific settings.

63-82 TORQUE SPECIFICATIONS

Brakes:	ft/lbs	size
Caliper Mounting Bolts - Front	70	7/16
Caliper Mounting Bolts - Rear	70	7/16
Rear Suspension:		
U-Joint (inner) U-Bolts	15	9/16
U-Joint (inner) Caps	30	9/16
U-Joint (outer) Flange Bolts	70	5/8 (use locks)
Strut Rod (Inner) Camber Bolt	70*	3/4
Shock Absorber (upper) Bolt	60	5/8 & 11/16
Shock Absorber (lower) Nut	40	3/4
Bearing Housing to T-Arm	30	9/16
Spindle Nut	100+	11/16

Warning: *If the assembly was not properly set-up, tightening the* ***spindle nut*** *will load the bearings and cause imminent bearing failure.*

Front Suspension:		
Upper A-Frame Bushing Bolt	35*	9/16
Upper A-Frame Align, Shim Nut	50	11/16
Lower A-Frame Fr. Mtg. Bolts	70	5/8
Lower A-Frame Rear Mounting	100	7/8 & 13/16
Steering Arm to Spindle	70	3/4 (63-68, 11/16)
Carrier:		
Pinion Bushing Bolt	65	5/8 & 11/16
Front Brackets to Housing	50+	5/8 & 11/16
Strut Rod Bracket Bolts	35	9/16
Rear Cover Bolts	50	5/8

+ plus additional torque when necessary to align cotter pin hole ** tighten bolts only when arms are at riding height*

The torque specs provided are a Dry Torque Spec. Wet Torque Specs are 20-25% less.

Please refer to a Torque Spec Bolt Chart for accurate Wet Torque Specs.

EXCHANGE PROGRAM

vansteel@vansteel.com

Exchange Units

Exchange units are available so that you, or your mechanic, can bolt-on and drive away. Receive the benefit and added measure of safety with a Van Steel rebuilt unit without sacrificing down time. A Core Deposit is required.

Rear Wheel Bearing Core

BAE- 43 L/R
With Matched New Rotor..... $289.99* ..$300.00
BAE-42 L/R
Without Matched Rotor..... $264.99 ....$300.00
BAE-42 L/R-D
Drum Brake Unit..... $282.99.....$300.00

T-Arm (with new Rotor)

Matched Rotor & SS Parking Brake Hardware
BAE- 44 L/R..... $409.99* ..$400.00
Drum Brake T-Arm
BAE- 44D L/R ..... $409.99 ....$400.00

Strut Rod

SR-27E (63-74)..... $55.99.....$55.00
SR-27L (75-82)..... $55.99.....$55.00

Axle Shaft

HS-24E (63-74)..... $85.99.....$80.00
HS-24L (75-82)..... $85.99.....$80.00

Steering Box

GB-27 E/L (63-82)..... $189.99.....$100.00

*Rotor Runout: Corvette rear spindles and rotors are a “matched set” from the factory. Replacing rotors or turning old rotors without marking their original location, often starts the problem. Common symptom range from squeaking noises to full pedal loss during highway driving. To minimize potential runout problems, Van Steel strongly recommends you order exchange units with rotors so we can perform the task of making sure the run out is minimal.

CORE POLICIES
800-418-5397

Core Prices

Bearing Assembly (per side) $300.00
T-Arm Assembly Complete
(per side) $400.00
Half Shaft (each) $80.00
Strut Rod (each..... $55.00
Steering Box $100.00
Upper A-Arm (each)..... $50.00
Lower A-Arm (each)..... $150.00
Brake Calipers (per wheel)..... $50.00
Power Steering Valve $100.00
Power Steering Ram $60.00

The core is refunded when the exchange parts are disassembled, thoroughly inspected and determined to be usable in future builds. The prices for non-usable parts are listed below.

T-Arm & Bearing Assembly Core Deductions

Spindle..... $110.00
Bearing Support (L/R) $150.00
Caliper Mounting Bracket (L/R) $80.00
T-Arm (L/R)..... $130.00

Core accounts will remain open for thirty (30) days from the day your order ships, unless other specific arrangements are made. Full refunds WILL NOT be given after thirty (30) days. The core refund will get reduced to half of the original core charge. If we deem there are bad parts, Van Steel will return the defective part(s) at the customers' request and expense.

Suspension

T-Arm Assemblies	Lifetime
Bearing Assemblies	Lifetime
Steering Boxes	Five Year
A-Arm Rebuild	Lifetime
Differential	One Year
Half Shafts	Five Year
Shock Absorbers (except racing)	Lifetime
QA1 Products	One Year
Steel Coil Springs	Five Year
Steel Leaf Springs	Five Year
Composite Springs	Lifetime
Spring Hardware	Lifetime

Chassis Parts

Anti-Sway Bars & Hardware	Lifetime
Ball Joints, Tie Rod Ends	Lifetime
Bushings (Rubber or Poly)	Lifetime
Centerlink	Lifetime
HD Control Arms	Lifetime
Idler Arm	One Year
Strut Rods (except racing)	Lifetime
HD Diff Cover	One Year

Brakes

Brake Hoses (Rubber or SS)	Five Year
O-Ring & SS Calipers	Lifetime
New Master Cylinders	Lifetime
New Power Boosters	Lifetime
SS Brake Lines	Five Year
Steel Brake Lines	One Year
SS Parking Brake Kits & Cables	Lifetime

Power Steering

Rebuilt Control Valves	Five Year
Rebuilt Steering Cylinder	Five Year
Power Steering Component Kit	Five Year
Power Steering Conversion Kit	Five Year
All other Power Steering Parts	Five Year

Van Steel Inc., warranties the following item(s) to be free from defects in material and workmanship to the original purchaser for the terms listed below. These warranties DO NOT cover: oversea shipments, any type of racing application, misuse or abuse, repairs, normal wear, shipping or storage costs, property damage, personal injury, diagnostic charges, labor, towing charges or any other associated expenses what so ever. At the discretion of Van Steel Inc, these warranties are for the repair or replacement of the defective part ONLY. It's the customers responsibility to provide proof of purchase (sales receipt) for any warranty transactions. Van Steel Inc. is not responsible for damage caused by improper installation.

NOTE:

- ***Rush orders are subject to a $10.00 Expedite Fee.***
- ***Large Heavy Suspension or Brake Packages may include an additional shipping charge of $2.50 per order.***

It's a Family Affair

Rene Meyer

Rene Meyer was born and educated in Germany. He moved to the United States in 1982. He immediately began working for Action Imports. In 1996 he bought th company and still owns it today. The sport car racing bug bit Rene four years ago. Today he enjoys participating in High Performance Driving Events (HPDE) with this blue small block powered 1973 Corvette. Rene's hobbies include; boating, jet skiing, guns and sport car racing. He has been married to his wife Arlene for 19 years.

Van Steel Goodies:

- VS front and rear coil-overs
- QA1 double adjustable shocks
- Hyperco OBD coil-over spring
- VS big front sway bar
- Dewitte Racing Radiator
- Wilwood D8-6 & D8-4 Calipers – with Thermolock Pistons
- Wilwood spec 37, 2 piece rotors
- VS HD racing smart strut assembly

Arlene Meyer

Arlene was born in Saint Petersburg and is a Domestic Engineer that takes care of five dogs. Arlene likes cars and had closely followed and supported Rene's racing activities. She decided to begin racing her Artic White 2010 Grand Sport. The white rocket has received upgrades to enhance its handling, braking and performance. Arlene gets faster each time she attends an HPDE. Her hobbies include boating, off road 4-wheeling, friends of strays and sports car racing.

Van Steel Goodies:

- VS Custom composite leaf springs front & rear
- VS Racing sway bars, adjustable F35mm/R25mm
- JRI/Raft double adjustable shocks
- Dewitt racing radiator
- VS Custom Delrin control arm bushing
- Wilwood 14" Big brake Kit w/spec 37 rotors – with Thermolock Pistons
- SKF Racing hub bearings

FORGELINE

our preferred wheel

Forgeline Motorsports manufactures the world's finest custom made-to-order lightweight forged aluminum street and racing performance wheels for the most discerning enthusiasts and the most demanding applications.

Every Forgeline wheel is engineered using computer-simulated finite element analysis and tested beyond SAE standards using real-world load variables to ensure strength, safety, and performance. Innovative features like I-beamed spokes, hidden titanium ARP fasteners, meticulously-engineered centers, and complex manufacturing techniques ensure that Forgeline wheels are strong, fast, and stunning.

Forgeline's own in-house manufacturing and engineering capabilities also provide unparalleled flexibility when it comes to vehicle fitments, wheel sizing, and custom finish options. Whether you need a wheel that is specially-built to accommodate your unique suspension and brake package, or you just want a custom color combination to express your own individual personality, Forgeline can get it done! We can even build completely original one-off wheel designs for prototypes, show cars, and creative enthusiasts who wish to have a truly original wheel.

CALL FOR CURRENT PRICING

TROUBLESHOOTING TIPS

Here are a couple of troubleshooting tips to help you figure out what is causing some problems that you may be having.

Rear End Clunks When Turning:
- Change Rear End Fluid & Additive. If problem persists, clutches need to be replaced

Rear End Clunks When Putting Into Gear:
- Check U-Joints, Pinion Bushing, Pinion Bracket on frame, Tranny Mounts..

Rear End Will Not Hold Alignment:
- Check T-Arm Bushings, Strut Rods Bushings (Rods Need to be Straight), Excessive Side Yoke play, Diff cross member bushings.

Front End Will Not Hold Alignment:
- Check side play in Ball Joints, Worn Inner & Outer Tie Rod Ends, Worn Idler Arm, Upper & Lower A-Arm Bushings, Steering Box.

Noisy Power Steering:
- Check Power Steering Fluid Level & Pump. Check for Leaks. Rack & Pinion Cars – Check Rack & Pinion

Steering Pulls/Loose Steering:
- Check for leaks. Check the caliper rubber hoses and all power steering parts for leaks.

Excessive Body Roll:
- Check sway bar(s). Bushings may be worn. Be sure to match front and rear bars or add a rear bar if you don't have one.

Car Sags:
- Check Springs, Body Mounts, Improperly Installed/Adjusted Springs, Air Pressure.

Bouncy Ride:
- Check Shocks, Air Pressure

Brakes Stick:
- Restrictive fluid movement through rubber flex hoses, Pinched Hoses, Sticking Caliper Piston, Sticking Caliper Guide Pins, Sticking Pedal Pivot, Mis-Matched Master Cylinder Piston, Pedal Ratio.

Brake Pulls:
- Check Air Pressure, Radial Pull, Restriction in Hydraulic System, Check Calipers, Brake Hoses, Pad Contamination, Loose Wheel Bearing, Check Pad Wear

Soft Pedal:
- Air In brake system, Check Rotor Run Out, Excessive Bearing play (Front& Rear), Worn Hoses, Master Cylinder Leaking Internally Leaking

Hard Pedal:
- Check Power Booster, Bad Rubber Flex Hoses, Incorrect Master Cylinder

Brake Squeal:
- Glazed Pads, Wrong Compound, Worn Anti Rattle Clips and or Guide Pins, Brake Pad Wear Indicators

C3 Bump Steer Kit

Prt No.	Year	Description	Price
Available Soon	*68-82*	*Adjustable Tie Rod Bump Steer Kit*	***CALL***

C3 Differential Tow Hook.....CALL

C7 Wilwood Brakes - 2014+

Prt No.	Discription	Price
BKW-140-13697	*Front Aerolite 6 Piston Calipers 14" 2 Piece Slotted Rotors - Black*	***$1,879.99***
BKW-140-13697-D	*Front Aerolite 6 Piston Calipers 14" 2 Piece Slotted & Drilled Rotors - Black*	***$1,979.99***
BKW-140-13697-DN	*Front Aerolite 6 Piston Calipers 14" 2 Piece Slotted Rotors - Nickel*	***$2,129.99***
BKW-140-13697-DR	*Front Aerolite 6 Piston Calipers 14" 2 Piece Slotted & Drilled Rotors -Red*	***$1,979.99***
BKW-140-13697-N	*Front Aerolite 6 Piston Calipers 14" 2 Piece Slotted Rotors - Nickel*	***$2,029.99***
BKW-140-13697-R	*Front Aerolite 6 Piston Calipers 14" 2 Piece Slotted Rotors - Red*	***$1,879.99***
BKW-140-13698	*Rear Wilwood Aerolite 6 Piston Calipers 14" 2 Piece Slotted Rotors - Black*	***$1,804.99***
BKW-140-13698-D	*Rear Aerolite 6 Piston Calipers 14" 2 Piece Slotted & Drilled Rotors - Black*	***$1,904.99***
BKW-140-13698-DN	*Rear Aerolite 6 Piston Calipers 14" 2 Piece Slotted Rotors - Nickel*	***$2,054.99***
BKW-140-13698-DR	*Rear Aerolite 6 Piston Calipers 14" 2 Piece Slotted & Drilled Rotors -Red*	***$1,904.99***
BKW-140-13698-N	*Rear Aerolite 6 Piston Calipers 14" 2 Piece Slotted Rotors - Nickel*	***$1,954.99***
BKW-140-13698-R	*Rear Aerolite 6 Piston Calipers 14" 2 Piece Slotted Rotors - Red*	***$1,804.99***

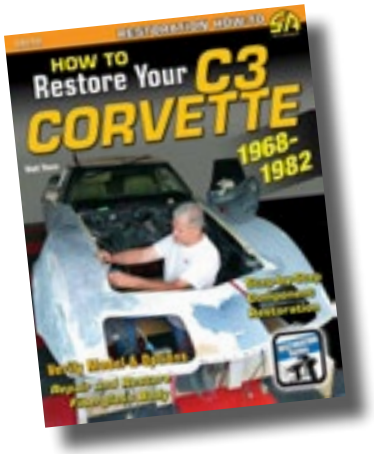

Order your complete how-to guide to restore your C3 Corvette

C3 Restoration Book.....$29.99

12285 West St. · Clearwater, FL 33762
727.561.9199 · Fax 727.561.7399

ORDER FORM

vansteel@vansteel.com

BILLING ADDRESS: Date_____

First Name _____

Last Name_____

Street _____

City _____ State____ ZIP_____

Phone_____

Email _____

SHIP TO:

First Name _____

Last Name_____

Street _____

City _____ State____ ZIP_____

Phone_____

Corvette: Year_____ H.P. _____

Engine _____ Trans. _____

Use: ☐ Street ☐ Street Modified ☐ AutoX/Track ☐ Drag Racing

Have you purchased with us before? ☐ Yes ☐ No

Qty	Part No.	Description	Unit Price	Amount

Total Merchandise	
Florida Residents add 7% Sales Tax	
Insurance - add $.75 per every $100.00	
Shipping	
C.O.D. Collection Chare $7.00 per box	
TOTAL	

Type of Payment: Check One

☐ Visa ☐ Mastercard ☐ Personal/Company Check

☐ American Express ☐ Certified Check

☐ Money Order ☐ Cash

*Credit Card No.*_____

Exp. Date _____ *Auth No.* _____

Signature _____

$2.00

CORVETTE SUSPENSION BRAKES & STEERING PARTS

12285 West Street
Clearwater, FL 33762
727.561.9199 • 800.418.5397
Fax 727.561.7399
vansteel.com • vansteel@vansteel.com

facebook.com/vansteelcorvettes
intagram: @vansteelcorvettes

VAN STEEL
CORVETTE SUSPENSION BRAKES & STEERING PARTS